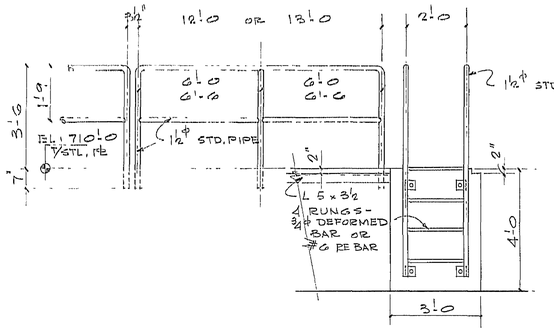

REMOVABLE RAILING
½" = 1'-0

FIXED LADDER
6 THUS

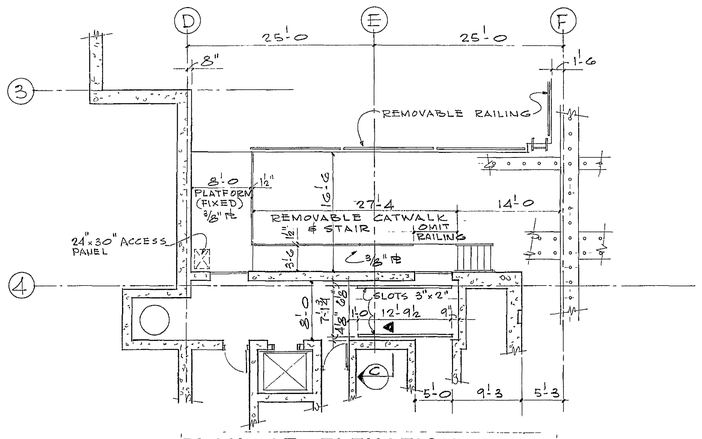

PLAN AT ELEVATION 710-0
FIXED & REMOVABLE CATWALKS.
REFER TO SHEET SS-6 FOR DETAILS

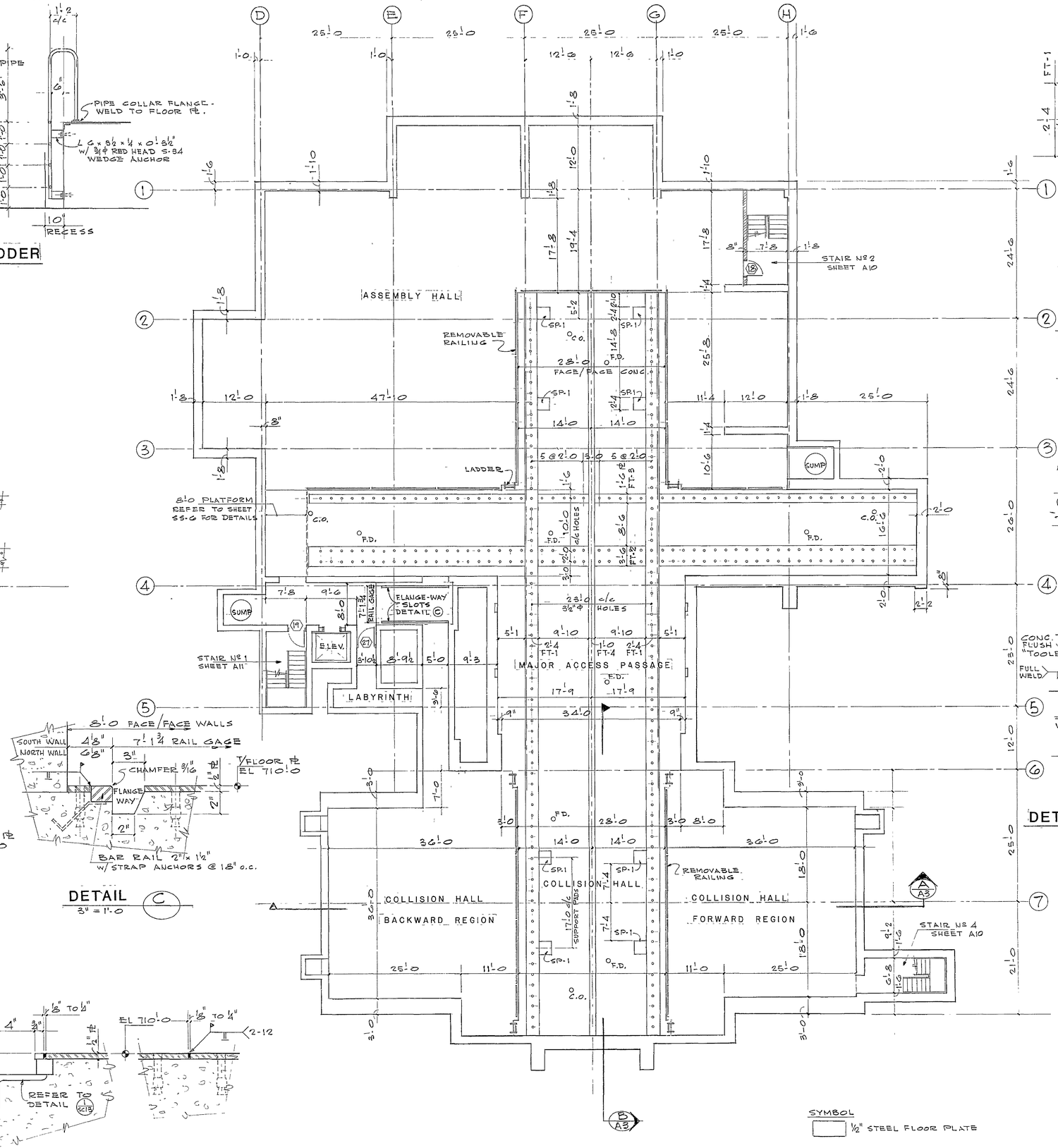

PLAN AT ELEVATIONS 706-0 & 710-0
SCALE: ⅛" = 1'-0

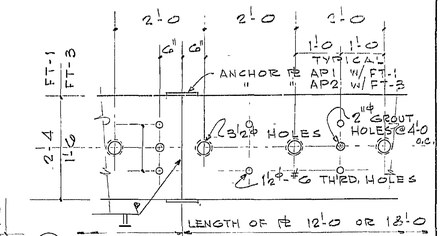

PLATE LENGTHS TO BE DETAILED TO HAVE JOINTS CENTERED ON EMBEDDED ANCHORS IN BASE SLAB

FT-1 FT-3 2½" PL
¾" = 1'-0

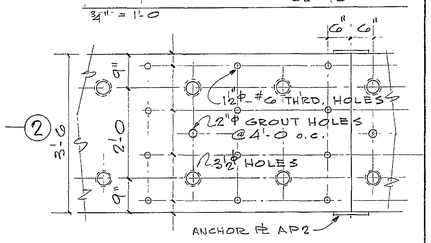

FT-2 2½" PL
¾" = 1'-0

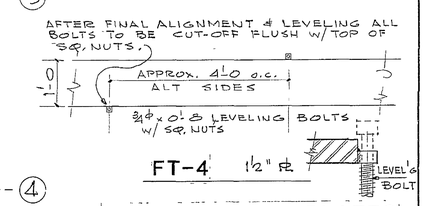

FT-4 1½" PL

FLOOR TRACK PLATES

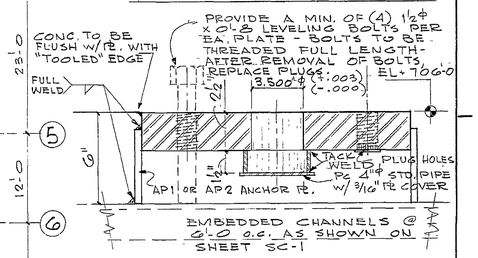

DETAIL - TYPICAL FLOOR TRACK
3" = 1'-0

FT ANCHOR PLATES
AP1 - 5 x ½ x 0'-9
AP2 - 5 x ⅜ x 0'-8
} EA SIDE OF FLOOR TRACK PLS @ 6'-0 o.c.

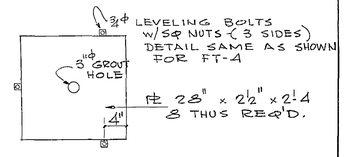

SUPPORT PAD PLATE

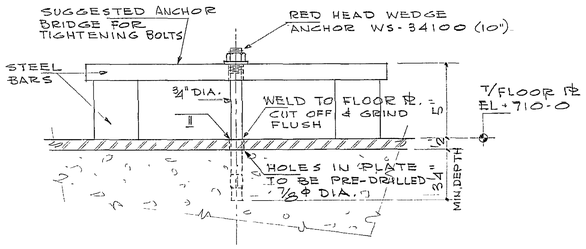

DETAIL - FLOOR PLATE ANCHORAGE

DETAIL C
3" = 1'-0

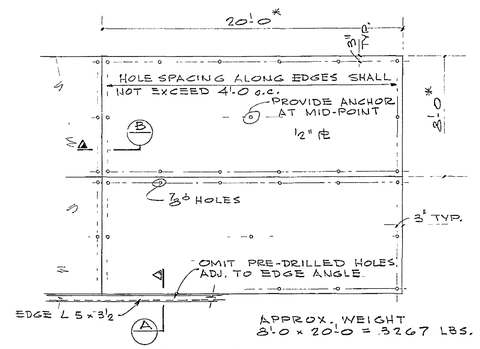

DETAIL - TYPICAL FLOOR PLATE
NOTE: * PLATE SIZE SHOW ABOVE IS ONLY A SUGGESTED MAXIMUM SIZE.

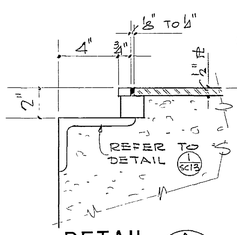

DETAIL A
3" = 1'-0

DETAIL B

SYMBOL
½" STEEL FLOOR PLATE

REV NO	DATE	DESCRIPTIONS
	2/13/82	POSTED AMENDMENT NO. 2

REVISIONS

DESIGNED	E MAJOR	5/3/82
DRAWN	J WEBBER	5/3/82
CHECKED	E L Major	5/3/82
APPROVED	Wayne A. Netzader	5/3/82
SUBMITTED	John Peoples for	5/3/82

PROJECT NORTH

SCALE: ⅛" 1'-0" Scale 4 0 4 8 12 16 20 Feet

FERMI NATIONAL ACCELERATOR LABORATORY
UNITED STATES DEPARTMENT OF ENERGY

B-0 EXPERIMENTAL AREA
FLOOR PLAN
ELEV. 706-0 & 710-0

DRAWING NO 6-1-37 A-2 REV.