B

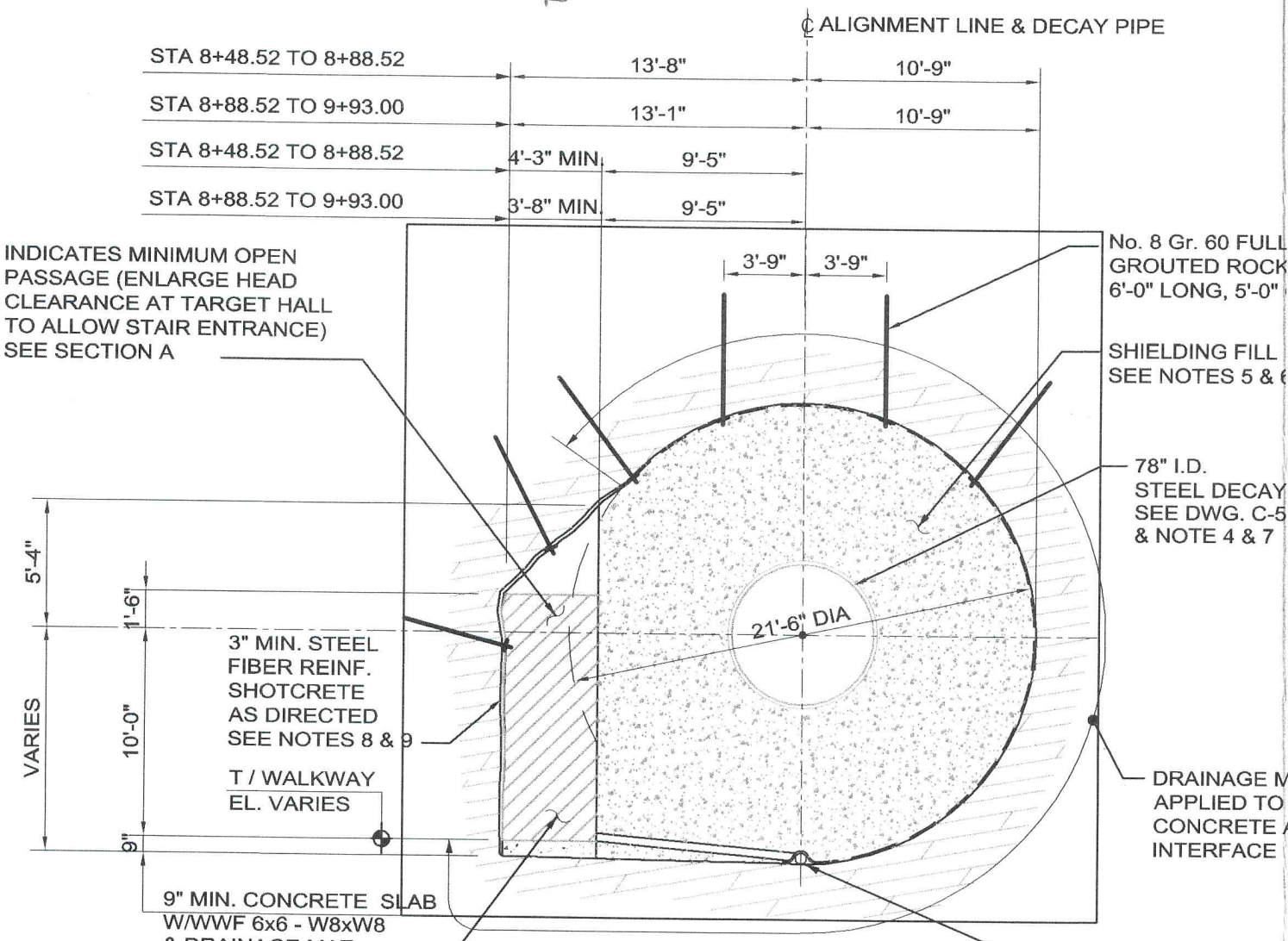

LAB
L

LY
K DOWELS,
O.C.EW.

SECTION

SCALE 3/16"=1'-0

B

C-34, C-46, C-52
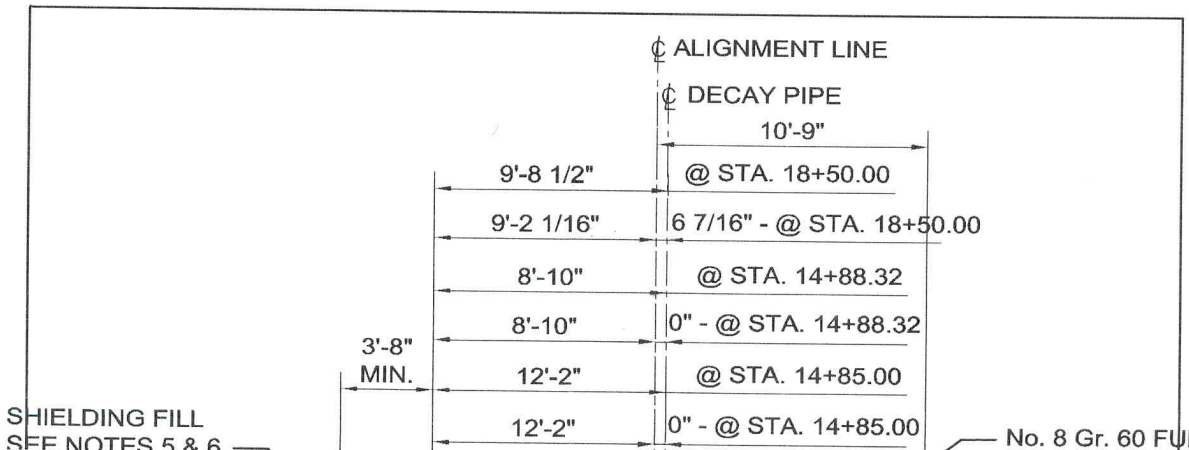
DECAY TUNNEL STA 8+48.52 TO STA 9+93.00