Title: Finite Element Analysis of E906 Station 3 & 4 Detector Support Structure at Fermilab	
Calculation No.: **NE-EO-2011-003**	Revision Number: 3

CALCULATION COVER SHEET

Supersedes Calculation No.:	Total Number of Attachments:
Analyzed System: E906 Station 3 & 4 Detector Support Structure	
Purpose of Revision: Added bracing between columns and cross beams	

PREPARER

P. Strons & R. Fischer, NE-EO

Print Name | Signature | Date

REVIEWER

Print Name | Signature | Date

VENDOR APPROVER (if vendor-supplied calculation)

n.a.

Print Name | Signature | Date

FINAL APPROVER

Print Name | Signature | Date

Title: Finite Element Analysis of E906 Station 3 & 4 Detector Support Structure at Fermilab	
Calculation No.: **NE-EO-2011-003**	Revision Number: 3

TABLE OF CONTENTS

COVER SHEET 1
TABLE OF CONTENTS 2
LIST OF EFFECTIVE PAGES 3
1 Objectives 4
2 Limitations 5
3 Acceptance Criteria 6
4 Methodology 6
5 Assumptions 6
6. Calculation 10
7 Conclusions 24
8 References 24
9 Computer Software Specifications 24

APPENDICES
Appendix A-K – Calculation back-up and Commercial reference

Title: Finite Element Analysis of E906 Station 3 & 4 Detector Support Structure at Fermilab	
Calculation No.: **NE-EO-2011-003**	Revision Number: 3

LIST OF EFFECTIVE PAGES

Pages	Revision
1 to 20	0
1 to 32	1
1 to 32	2

1Objectives

The purpose of this note is to document the FEA confirming that the design of E906 Stations 3 & 4 Support Frame (see Figure 11) meets requirements of Allowable Strength Design (ASD) as defined by The AISC Steel Construction Manual, 13th Edition.

Title: Finite Element Analysis of E906 Station 3 & 4 Detector Support Structure at Fermilab	
Calculation No.: **NE-EO-2011-003**	Revision Number: 3

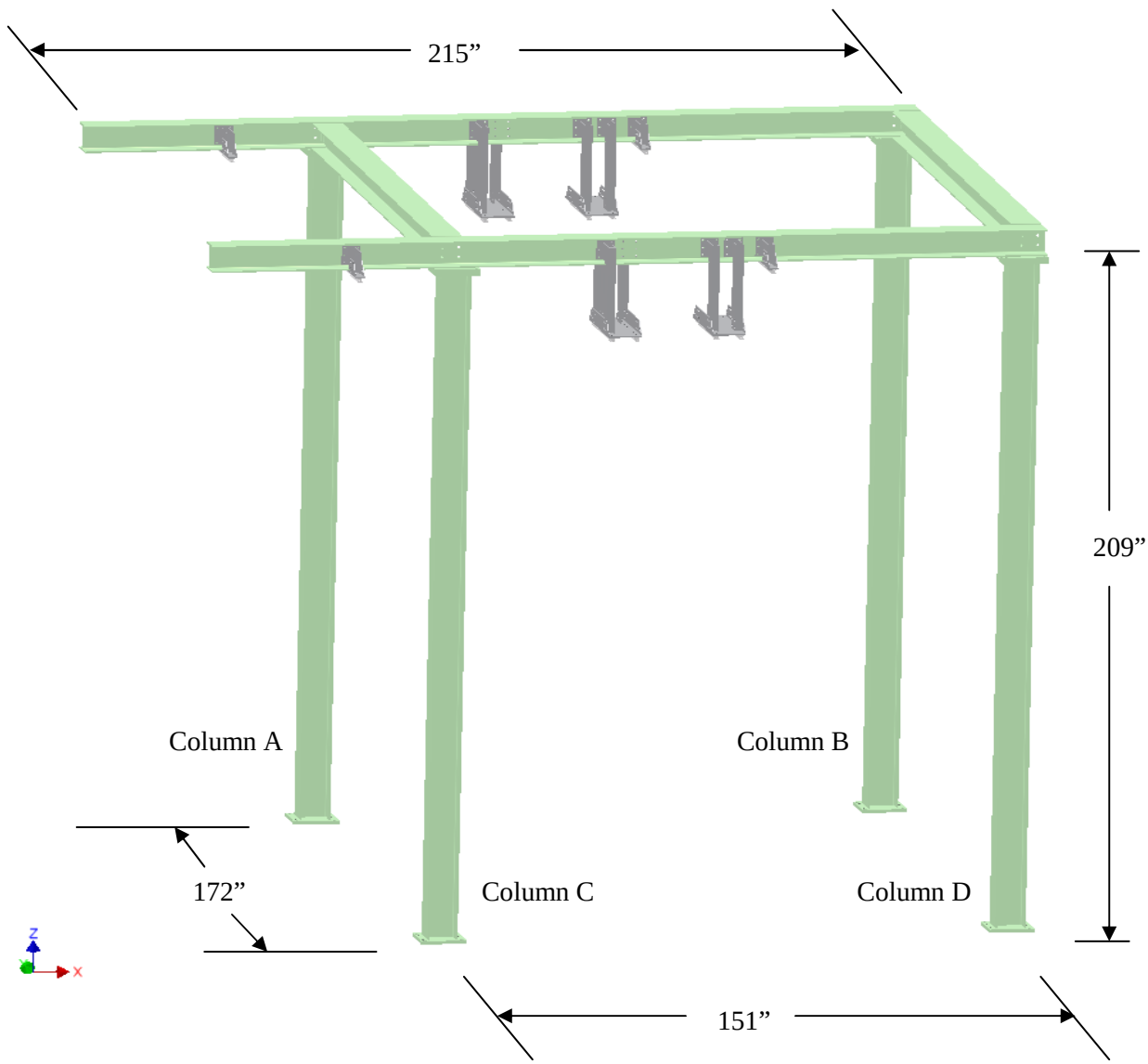

Figure 1 E906 Station 3 &4 Support Frame structural members (shown in light green) are AISC size W8x31 wide-flange I-beams. The drop connectors (shown in gray) connect the detectors to the structure.

2Limitations

This analysis is limited to the Support Frame structure. The analysis is contingent upon the use meeting the assumptions specified in section 5.

3Acceptance Criteria

The acceptance criteria are to meet the requirements of the AISC Steel Construction Manual 13th Edition, using ASD (Note that in the 13th Edition, unlike previous editions, that ASD is Allowable Strength Design instead of Allowable Stress Design, where strength is intended to mean maximum applied load). The requirements are defined in Part 16, Specifications and Codes.

4Methodology

The methodology of calculation was based on static elastic FEA, which was verified by following the AISC Steel Construction Manual code to determine the allowable loading in the structure.

5Assumptions

The following assumptions are made with regard to the construction of the Support Frame structure:

- The material used for construction of the structure is A36 steel with linear elastic behavior
- The A36 steel has a Young's Modulus of 29e6 psi and poisson's ratio of 0.30
- The design of the Support Frame structure is described by the file Station_3_and_4_Layout_for Kevin.stp.
- All members have rigid, moment transferring connections to one another (See Section 6.7 for the correction made to this assumption.)
- All columns are fixed in all degrees of freedom at their bases

5.1 Support Frame applied loads

There are three load cases in this FEA:

- Load Case #1 models the detectors in place plus gravitational loading from the mass of the structural members (See Fig. 2)
- Load Case #2 models the effect of moving detectors out for service plus gravitational loading from the mass of the structural members (See Fig. 3)
- Load Case #3 has the loads from Load Case #1 plus an additional seismic load (See Fig. 4)

Title: Finite Element Analysis of E906 Station 3 & 4 Detector Support Structure at Fermilab	
Calculation No.: **NE-EO-2011-003**	Revision Number: 3

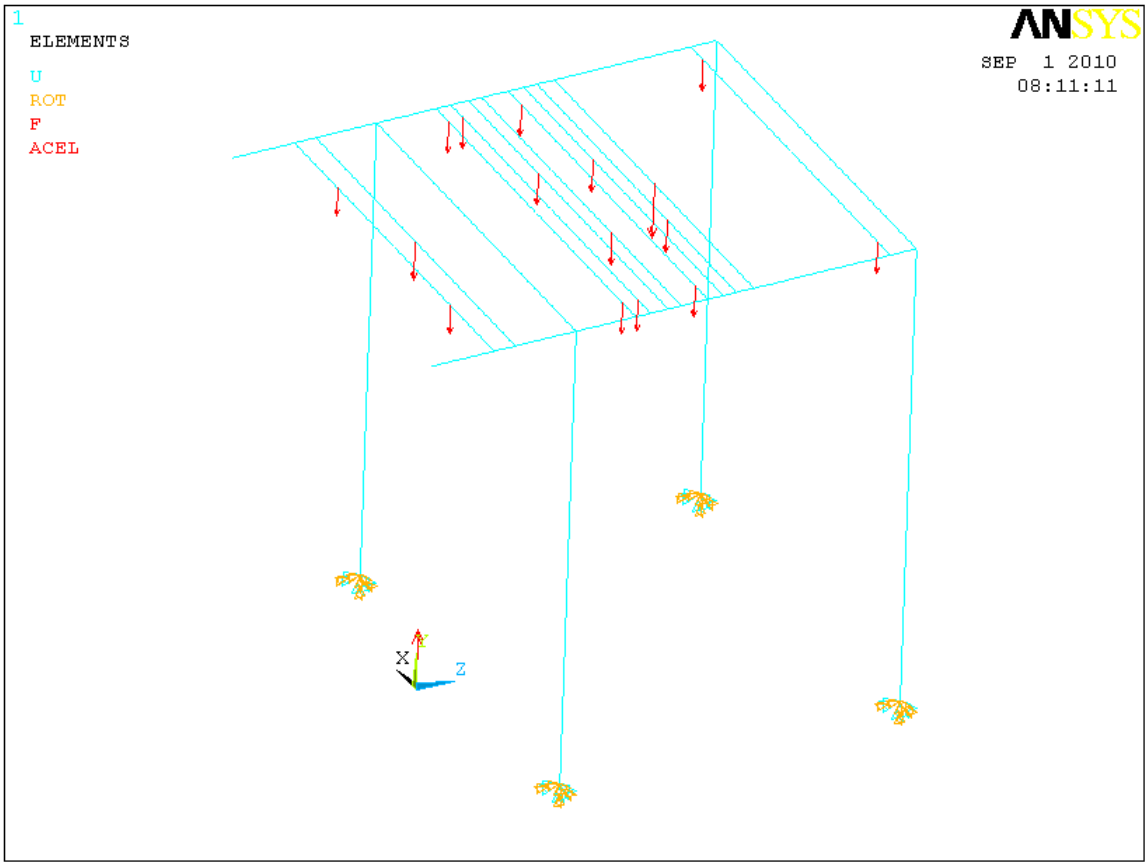

	CAD_load Xeast	CAD_load Xwest	Cross Beam No.	CAD_load_ z	Total Weight	Detector Type
Chamber 3 Lower			1	-44.403		
Chamber 3 Upper	-48.629	48.629	2	-16.773	770	fixed
Hodo 3x	-46.5	46.5	3	-7.31	540	sliding
Iron Wall	0	0	4	19.6	0	
Station 4a prop tube X	-75	75	5	46.06	870	fixed
Station 4a Prop tube Y	-75.5	75.5	6	52.68	870	fixed
Station 4Ya1 Hodo	-15	67.25	7	60.44	450	sliding
Station 4Ya2 Hodo	-67.25	15	8	66.31	450	sliding
Station 4bx Prop tubes	-75	75	9	78.06	870	fixed
Station 4BY1 Hodo	-15	67.25	10	84.88	450	sliding
Station 4BY2 Hodo	-67.25	15	11	90.75	450	sliding
Stations 4BX Hodo	-62.5	62.5	12	98.5	775	sliding
Station 4by Prop tubes	-75.5	75.5	13	159	870	fixed

Figure 2: Load Case #1, Detectors in place, Gravity load.

Title: Finite Element Analysis of E906 Station 3 & 4 Detector Support Structure at Fermilab	
Calculation No.: **NE-EO-2011-003**	Revision Number: 3

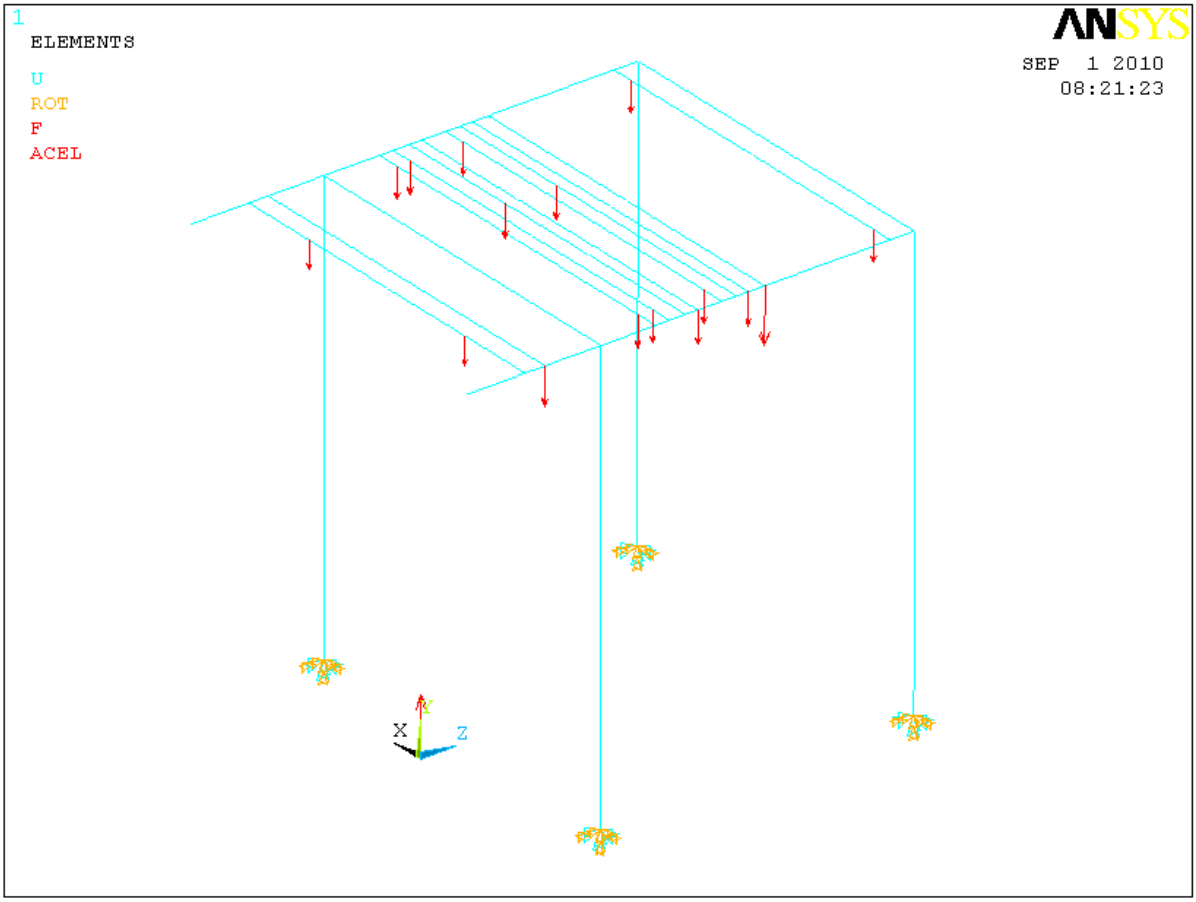

	CAD_load Xeast	CAD_load Xwest	Cross Beam No.	CAD_load_z	Total Weight	Detector Type
Chamber 3 Lower			1	-44.403		
Chamber 3 Upper	-48.629	48.629	2	-16.773	770	fixed
Hodo 3x	-46.5	46.5	3	-7.31	540	sliding
Iron Wall	0	0	4	19.6	0	
Station 4a prop tube X	-75	75	5	46.06	870	fixed
Station 4a Prop tube Y	-75.5	75.5	6	52.68	870	fixed
Station 4Ya1 Hodo	-15	67.25	7	60.44	450	sliding
Station 4Ya2 Hodo	-67.25	15	8	66.31	450	sliding
Station 4bx Prop tubes	-75	75	9	78.06	870	fixed
Station 4BY1 Hodo	-15	67.25	10	84.88	450	sliding
Station 4BY2 Hodo	-67.25	15	11	90.75	450	sliding
Stations 4BX Hodo	-62.5	62.5	12	98.5	775	sliding
Station 4by Prop tubes	-75.5	75.5	13	159	870	fixed

Figure 3: Load Case #2, Detectors rolled out, Gravity load.

Title: Finite Element Analysis of E906 Station 3 & 4 Detector Support Structure at Fermilab	
Calculation No.: **NE-EO-2011-003**	Revision Number: 3

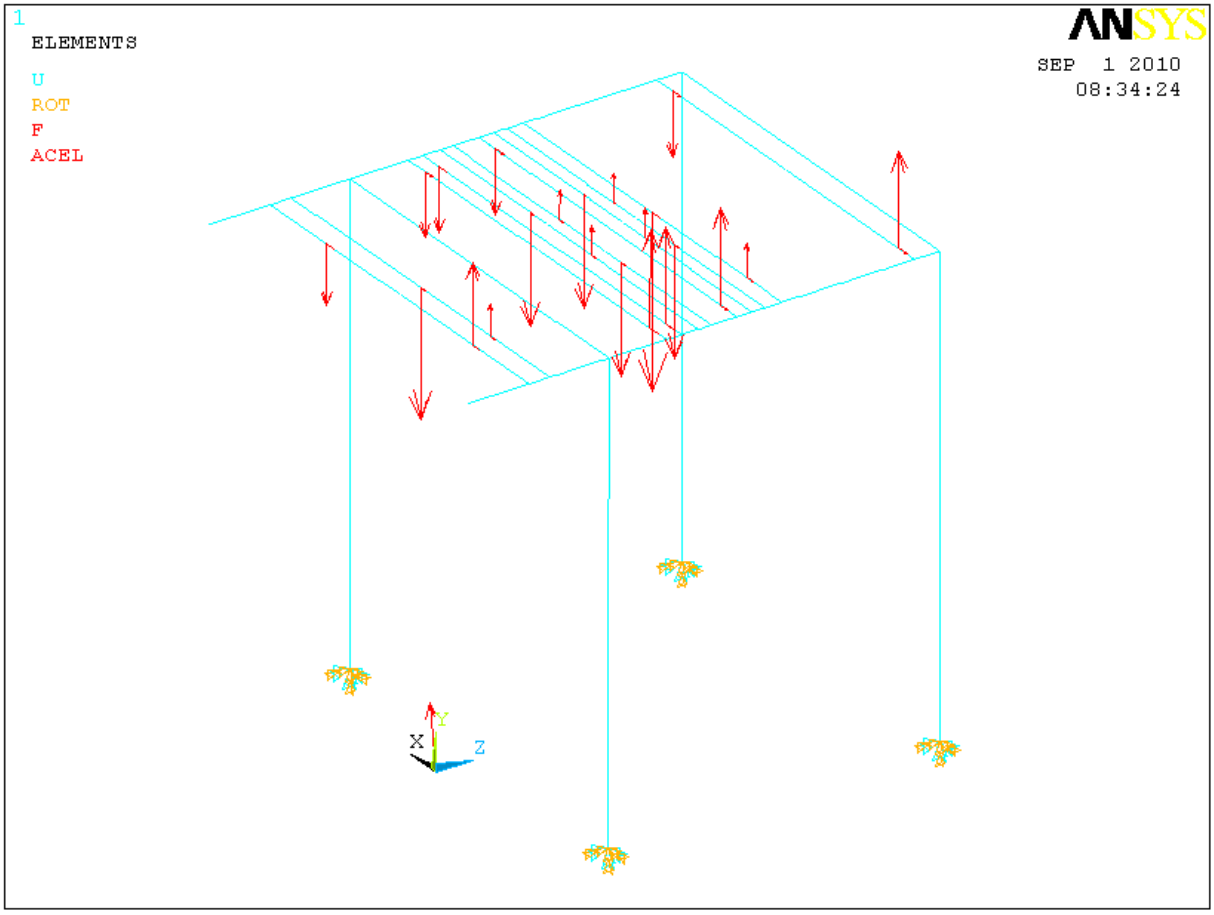

	CAD_load Xeast	CAD_load Xwest		CAD_load_z	Total Weight		Seismic Loads			
Chamber 3 Lower			1	-44.403			Ly	Ry	Lx	Rx
Chamber 3 Upper	-48.629	48.629	2	-16.773	770	fixed	444	326	57.75	57.75
Hodo 3x	-46.5	46.5	3	-7.31	540	sliding	168	-708	40.5	40.5
Iron Wall	0	0	4	19.6	0					
Station 4a prop tube X	-75	75	5	46.06	870	fixed	520	350	65.25	65.25
Station 4a Prop tube Y	-75.5	75.5	6	52.68	870	fixed	519	351	65.25	65.25
Station 4Ya1 Hodo	-15	67.25	7	60.44	450	sliding	158	-608	33.75	33.75
Station 4Ya2 Hodo	-67.25	15	8	66.31	450	sliding	158	-608	33.75	33.75
Station 4bx Prop tubes	-75	75	9	78.06	870	fixed	520	350	65.25	65.25
Station 4BY1 Hodo	-15	67.25	10	84.88	450	sliding	158	-608	33.75	33.75
Station 4BY2 Hodo	-67.25	15	11	90.75	450	sliding	158	-608	33.75	33.75
Stations 4BX Hodo	-62.5	62.5	12	98.5	775	sliding	182	-957	58.125	58.125
Station 4by Prop tubes	-75.5	75.5	13	159	870	fixed	519	351	65.25	65.25

Figure 4: Load Case #3, Detectors in place, Gravity load, Seismic X load.

6. Calculation

6.1 FEA Load Case #1 Results

Load Case #1 is the standard configuration with loading applied from each detector. In Fig. 5, the bending stress combined with the direct stress is shown in psi. The maximum combined stress (2139 psi)

Title: Finite Element Analysis of E906 Station 3 & 4 Detector Support Structure at Fermilab	
Calculation No.: **NE-EO-2011-003**	Revision Number: 3

is in the W8X31 beams located at the top on either side of the beamline. The minimum stress is found in the same beams with a value of -2241 psi.

In Fig. 6, the deflection in the vertical direction is shown. The ends of the W8X31 beams on the sides deflect up by 0.016 inches. Near the midpoint of the same beams, the deflection is down by 0.044 inches.

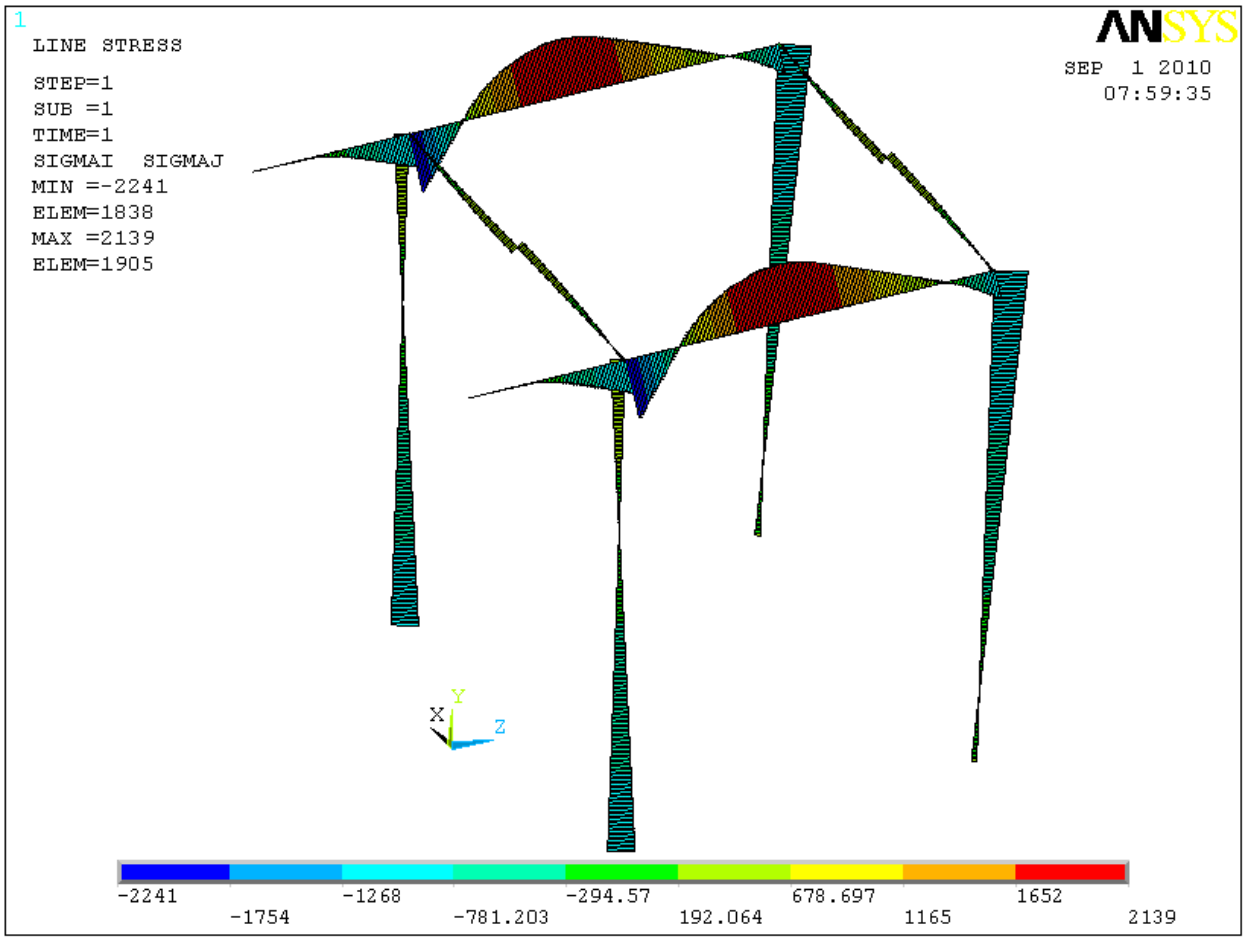

Figure 5 Bending + Direct Stress plot for Load Case #1.

Title: Finite Element Analysis of E906 Station 3 & 4 Detector Support Structure at Fermilab	
Calculation No.: **NE-EO-2011-003**	Revision Number: 3

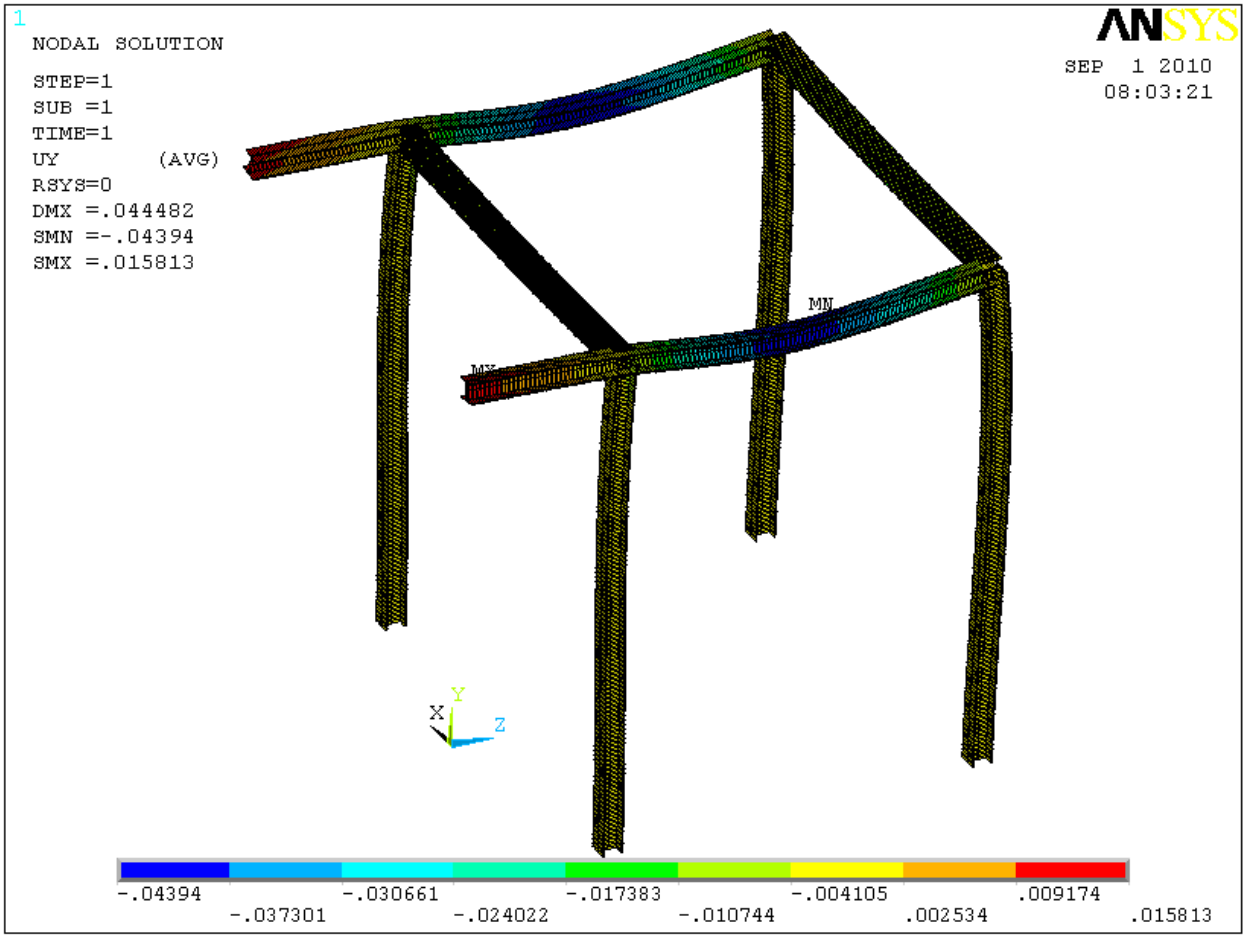

Figure 6 Y Deflection plot for Load Case #1

Table 1: Reaction at column bases, Load Case #1

COLUMN	A	B	C	D
FX	-17.218	-16.912	17.079	17.051
FY	4702.4	2495.4	4691.1	2506.7
FZ	199.33	-199.21	200.07	-200.19
MX	14344.	-12921.	14417.	-12965.
MY	0.24502E-01	0.33351E-01	0.25160E-01	0.15094E-01
MZ	1199.7	1172.4	-1184.0	-1188.1

6.2 FEA Load Case #2 Results

Load Case #2 is the configuration with loading applied from each detector, but detectors that are able to slide out for maintenance apply their loads to just one side of the structure. In Fig. 7, the bending stress combined with the direct stress is shown in psi. The maximum combined stress (2629 psi) is in the W8X31 beam located at the top on the side of the beamline where detectors are slid out for maintenance. The minimum stress is found in the same beam with a value of -2679 psi.

Title: Finite Element Analysis of E906 Station 3 & 4 Detector Support Structure at Fermilab	
Calculation No.: **NE-EO-2011-003**	Revision Number: 3

In Fig. 8, the deflection in the vertical direction is shown. The end of the W8X31 beam on the maintenance side deflects up by 0.018 inches. Near the midpoint of the same beam, the deflection is down by 0.050 inches.

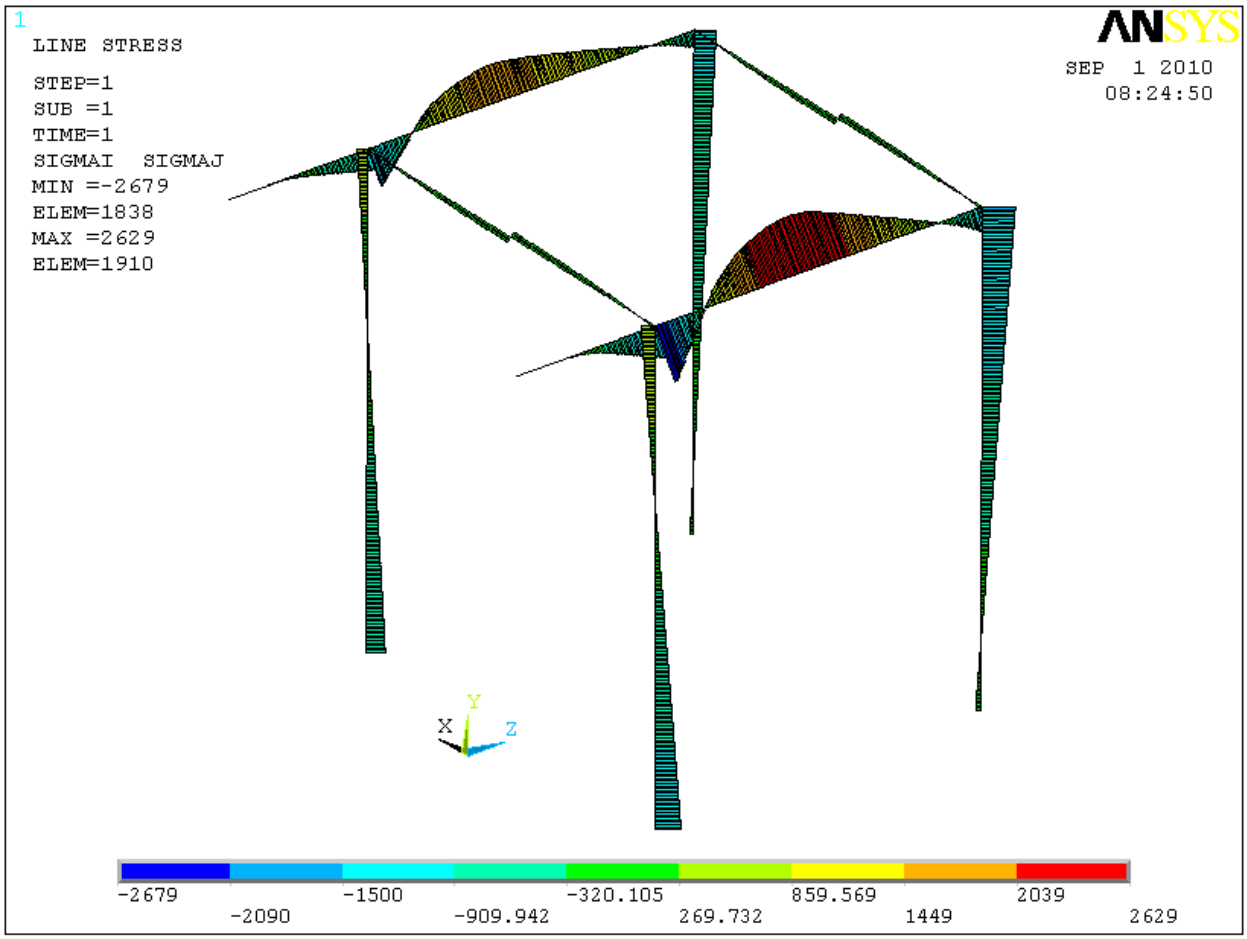

Figure 7 Bending + Direct Stress plot for Load Case #2.

Title: Finite Element Analysis of E906 Station 3 & 4 Detector Support Structure at Fermilab	
Calculation No.: **NE-EO-2011-003**	Revision Number: 3

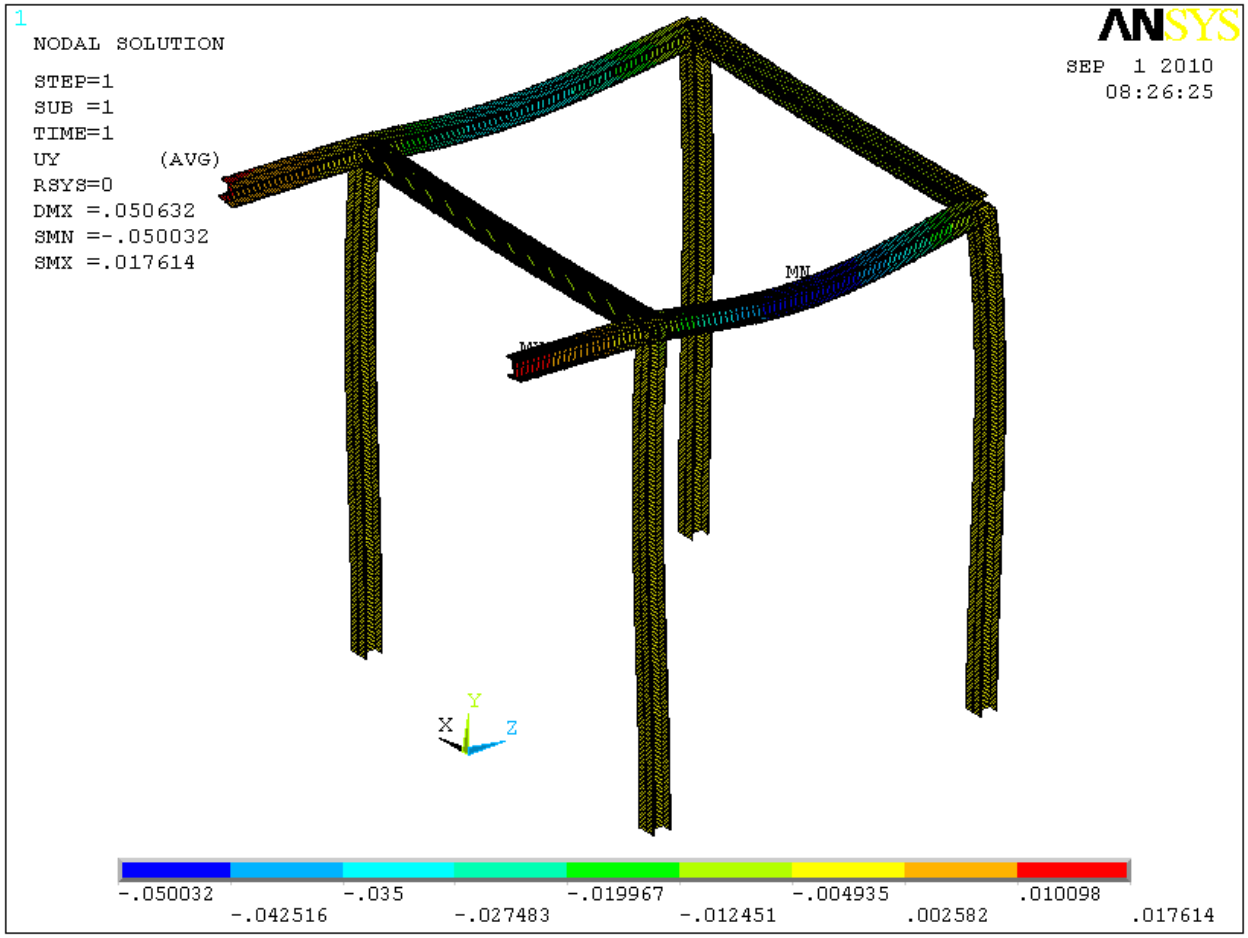

Figure 8 Y Deflection plot for Load Case #2.

Table 2: Reaction at column bases, Load Case #2

COLUMN	A	B	C	D
FX	-20.697	-16.522	16.353	20.866
FY	3986.0	2178.7	5344.1	2761.6
FZ	176.81	-172.99	256.21	-260.03
MX	11822.	-10681.	17530.	-15680.
MY	0.58606	0.58113	0.58681	0.55981
MZ	1407.1	986.26	-1019.3	-1462.2

6.3 FEA Load Case #3 Results

For a seismic event, Load Case #3has loading applied from each detector in its normal position, but a horizontal load is added. The horizontal load is 0.15 times the load of the detector split between the two support points. (Value of 0.15g provided by Dave Pushka.) In Fig. 9, the bending stress combined with the direct stress is shown in psi. The maximum combined stress (1983 psi) is in the W8X31 beam located at the front top in between the two detector support beams. The minimum stress is found in the same beam with a value of -2286 psi.

Title: Finite Element Analysis of E906 Station 3 & 4 Detector Support Structure at Fermilab	
Calculation No.: **NE-EO-2011-003**	Revision Number: 3

In Fig. 10, the deflection in the vertical direction is shown. The end of the W8X31 beam on one side deflects up by 0.012 inches. Near the midpoint of the same beam, the deflection is down by 0.041 inches.

In Fig. 11, the deflection in the horizontal direction is shown. The highest magnitude deflection in X is 0.474 inches.

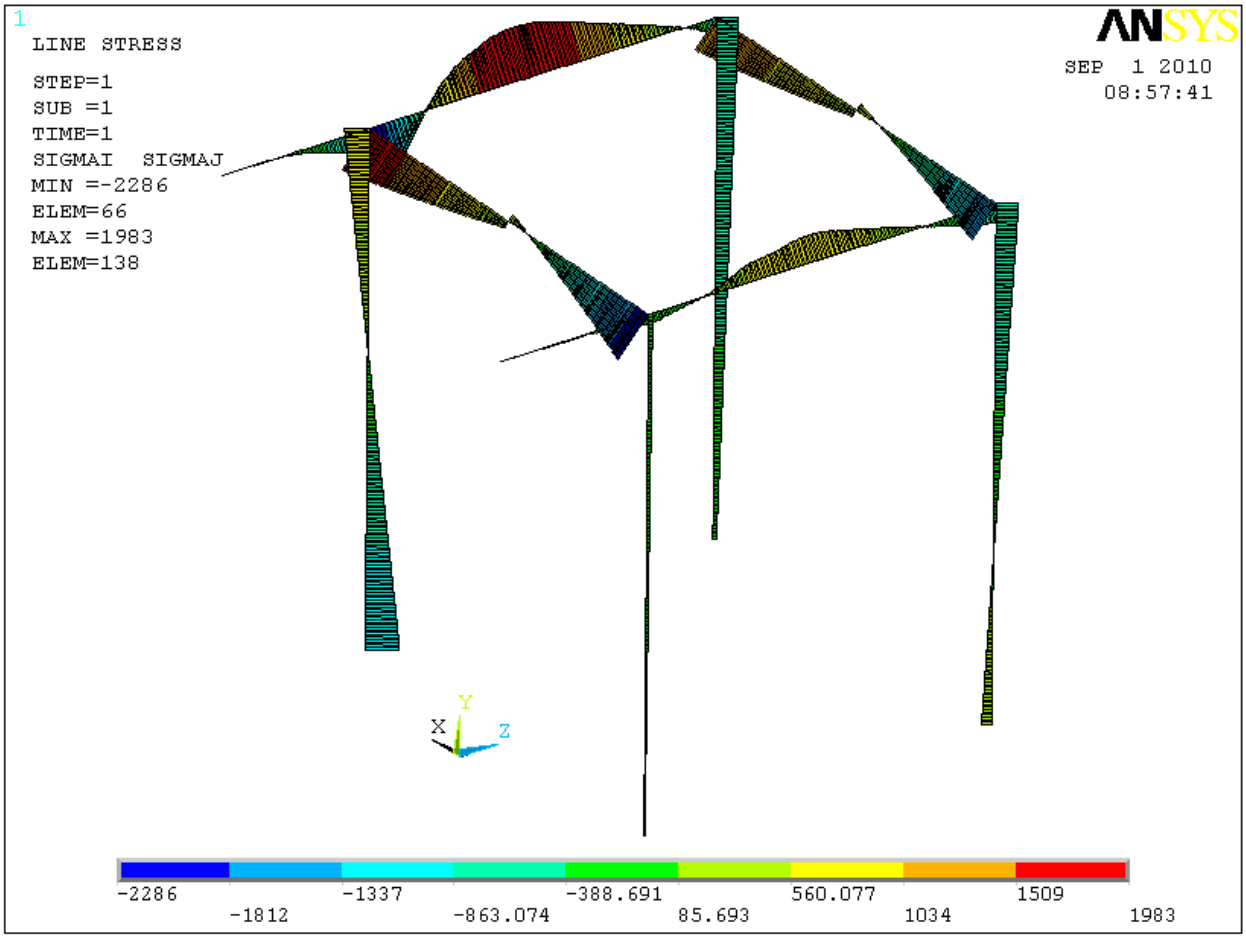

Figure 9 Bending + Direct Stress plot for Load Case #3.

Title: Finite Element Analysis of E906 Station 3 & 4 Detector Support Structure at Fermilab	
Calculation No.: **NE-EO-2011-003**	Revision Number: 3

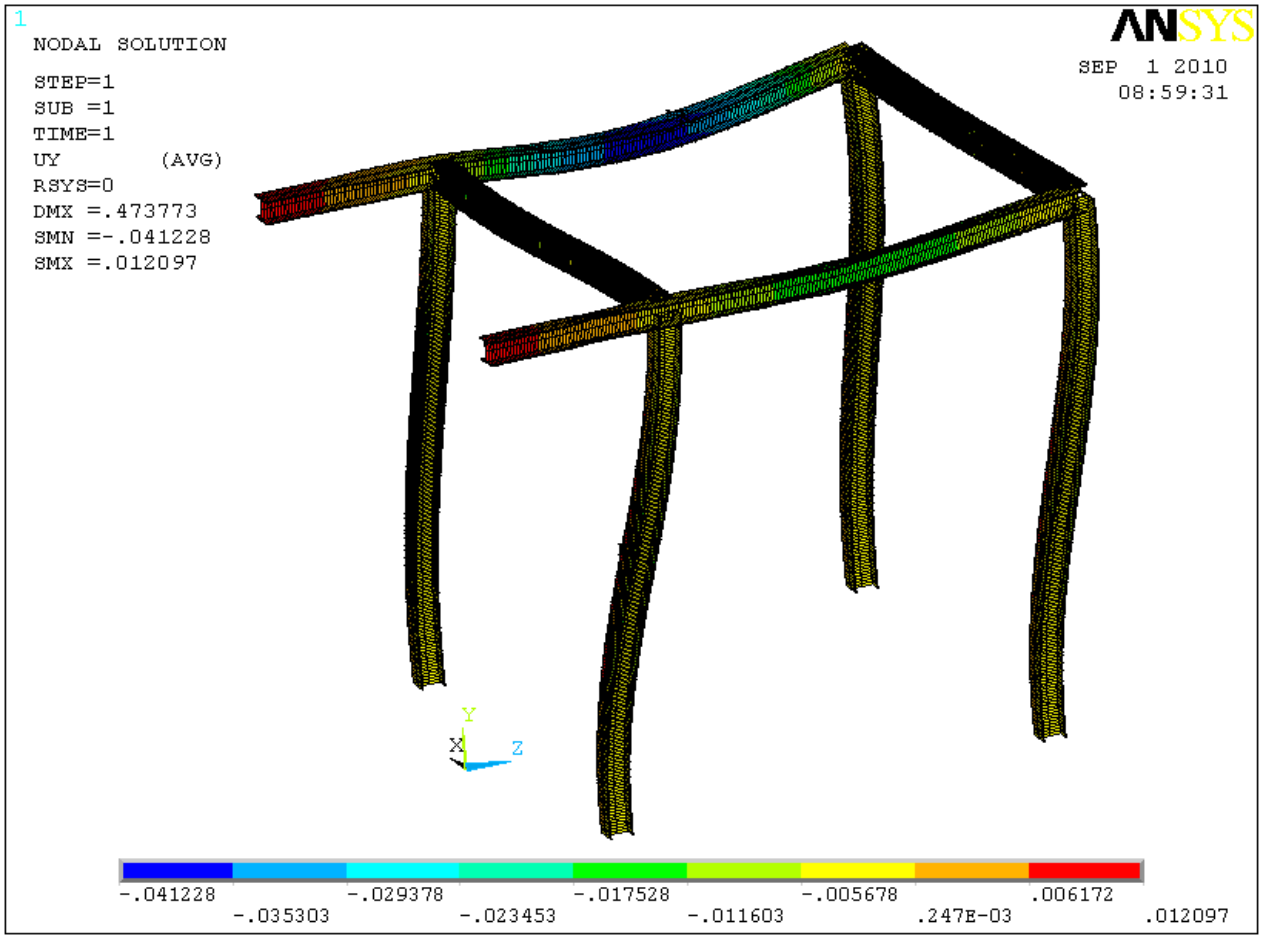

Figure 10 Vertical deflection plot for Load Case #3.

Title: Finite Element Analysis of E906 Station 3 & 4 Detector Support Structure at Fermilab	
Calculation No.: **NE-EO-2011-003**	Revision Number: 3

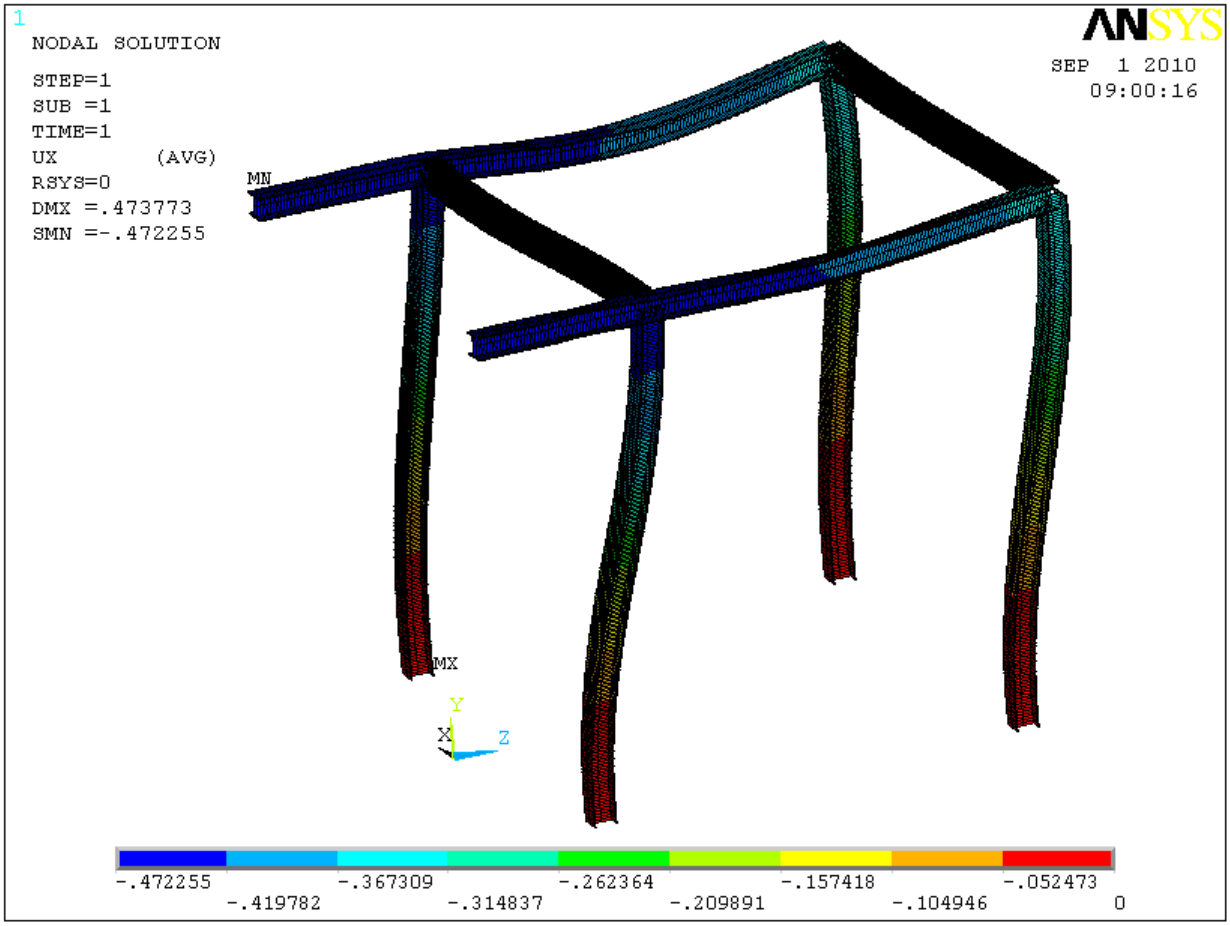

Figure 11 Horizontal deflection plot for Load Case #3.

Table 3: Reaction at column bases, Load Case #3

COLUMN	A	B	C	D
FX	578.67	467.35	612.69	500.63
FY	3682.5	1719.1	2229.4	1720.6
FZ	287.70	-94.75	-24.66	-168.29
MX	24799	-1360.2	-5801.7	-15632
MY	-10.33	-18.05	-10.33	-18.07
MZ	-60828	-48669	-63192	-50982

6.4 Compressive Strength of the Column

The highest compressive force (taken from reaction force data in the FEA results) on any column from all load cases is 5344 lbf in Load Case #2. According to Section E3 of the Steel Construction Manual, the nominal compressive strength for a W8X31 column is 135,000 lbf. With the ASD safety factor of 1.67, the allowable compressive strength is 80,000 lbf. Since the load of 5344 lbf is less than the allowable, the columns are strong enough to resist buckling.

6.5 Combined flexure and compression in column

The highest combination of compressive force and bending moment is found in Load Case #3. The compressive load is 5297 lbf, and the moment is 73,773 in-lbf. Section H1 of the Steel Construction Manual gives Eqn. H1-1b, which combines the ratios of applied load to allowable load. The combination must be less than or equal to 1.0. For the case of the W8X31 column, the combination of ratios is 0.149, well below 1.0.

6.6 Connections to floor and between members

Calculations for the following values are to be found in appendices C – H. The allowable strengths for these portions of the structure are all far greater than the applied loads.

6.6.1 Base plate and anchors

The columns are welded all around to 1” thick base plates that are 12” square. The leg of the weld is 3/8”. See Figure 12 below. Since the weld has greater area and greater moments of inertia than the column section, it is strong enough by inspection.

The plates are bolted to the floor with 3/4” diameter Hilti anchors. The anchors have a total shear force of 647 lbf, whereas the recommended maximum shear force is 5161 lbf. The highest tensile load in any one threaded rod is 3139 lbf, but the recommended maximum load is 4196 lbf. Checking the combined effects of tension and shear reveals that there are no problems. (See Appendix D) The allowable bearing strength for the bolt holes 32,000 lbf.

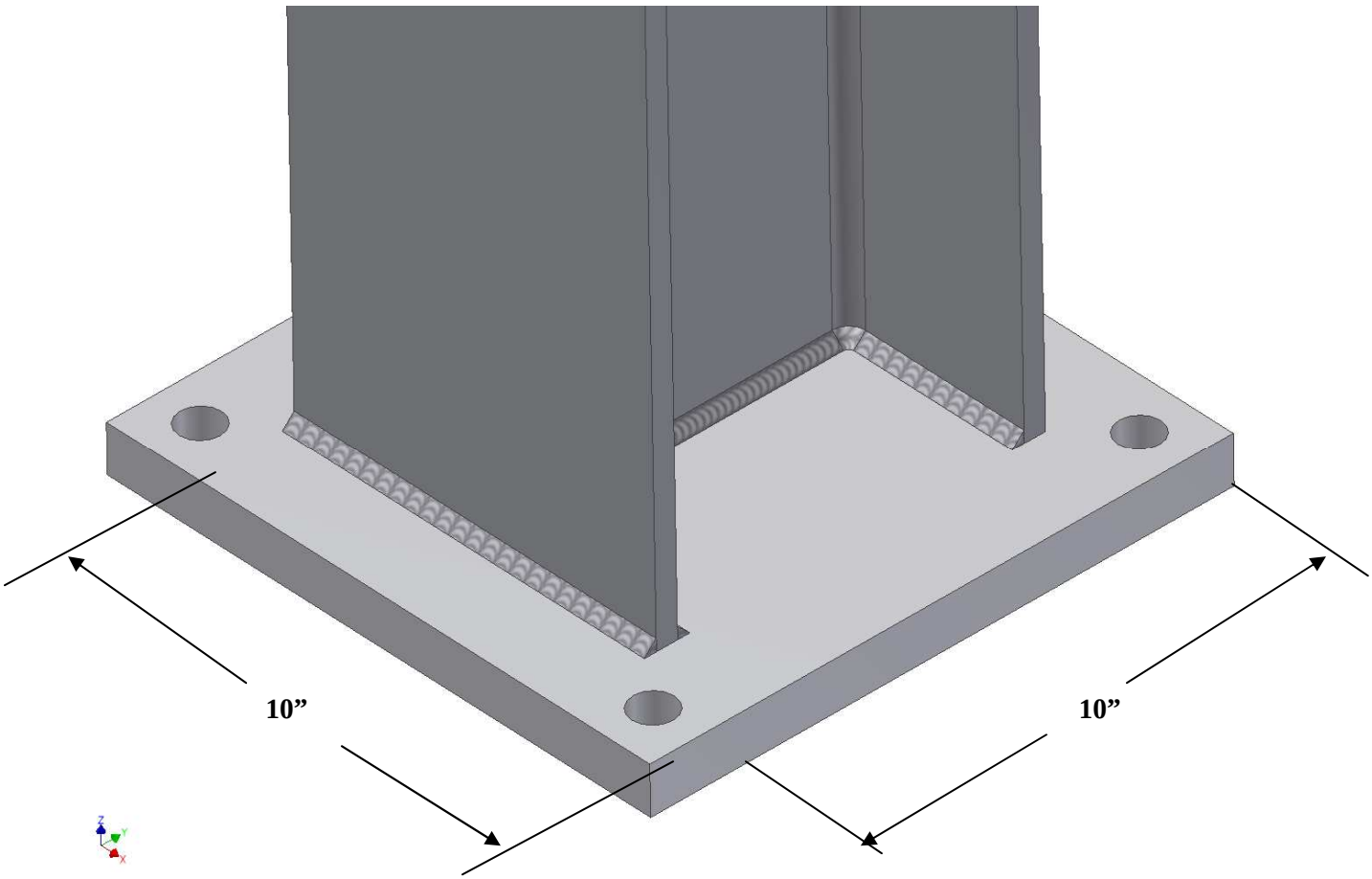

Figure 12 Base plate geometry. The column is has a 3/8” fillet weld all around. The plate is connected to the floor with 3/4” Hilti anchors.

6.6.2 Column to beam

The joint between column and beam is similar to the base plate that connects the column to the floor. See Figure 13 below. From the base plate calculations, we know that the bolted connection is strong enough. The allowable shear strength of the weld from beam to column is 76,368 lbf.

Figure 13 Photo of the connection between column and beam. Design is similar to that of the column base plate.

6.6.3 Beam to beam connection

The beam to beam connections are shown in Figure 14 below. Assuming the bolt diameter to be 0.5”, the allowable shear load on the bolts is 18,850 lbf.

Figure 14 Photo of the beam to beam connection.

6.7 Modifications needed if assuming pinned connections between members

Modifying the model so that connections between members are pinned does not have much of an effect on member stresses. However, this does substantially increase the reaction moments at the bases of the columns, which in turn causes the anchor bolts to be overloaded. The connections between the cross beams and the columns should be reinforced. Figures 15 and 16 show recommended methods of bracing the structure. Figure 15 shows a 4” x 4” tube bracing the upstream locations, and Figure 16 shows a bracket plate for the downstream locations. Extracting forces from the FEA model, the square tube sees a compressive load of 4043 lbs. Appendix H shows that the tube is strong enough according to Section E3 of The Steel Construction Manual. Because the downstream column has a different orientation, a bracket plate design is recommended instead of using a bracing member. Design parameters for bracket plates are covered in Part 15 of The Steel Construction Manual. Supporting calculations for the plate can be found in Appendix I. Supporting calculations for the weld group can be found in Appendix J.

Title: Finite Element Analysis of E906 Station 3 & 4 Detector Support Structure at Fermilab	
Calculation No.: **NE-EO-2011-003**	Revision Number: 3

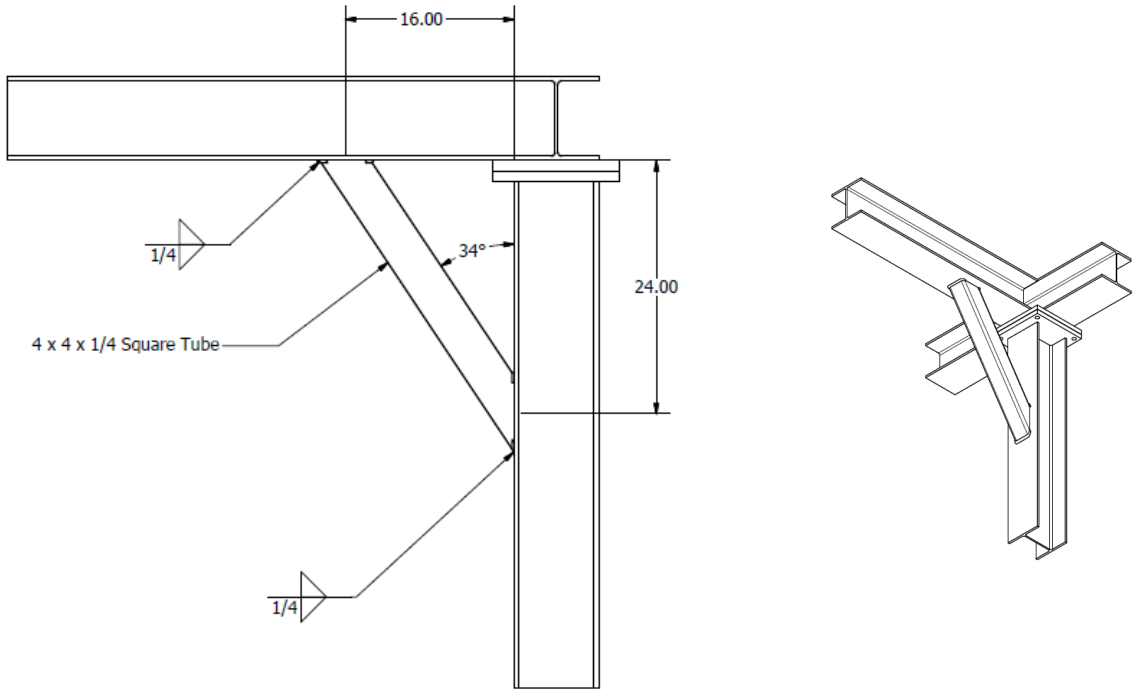

Figure 15 Recommended bracing between the cross beam and column at the upstream locations.

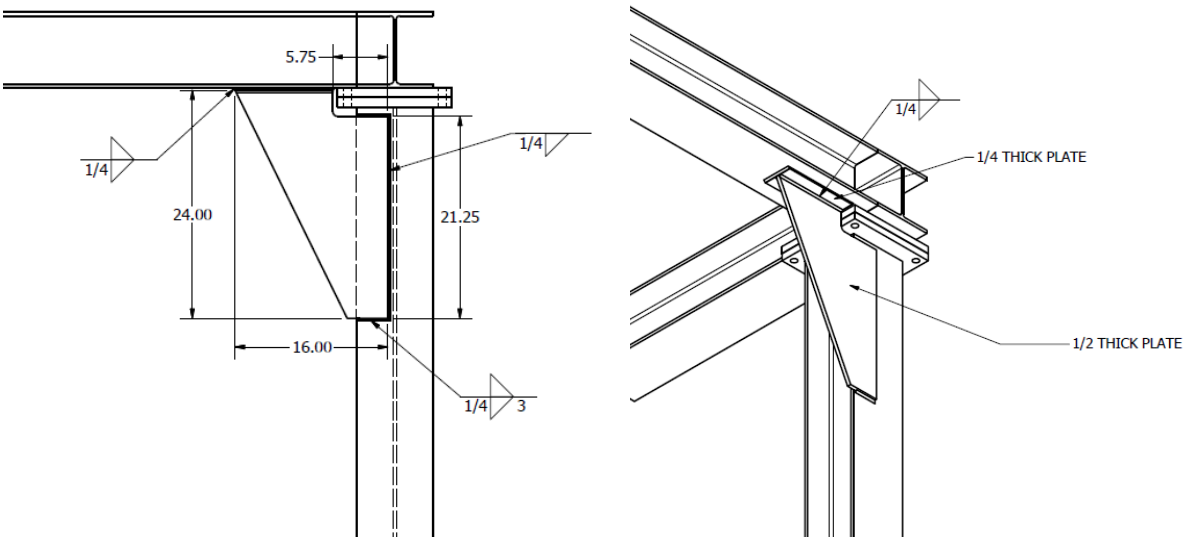

Figure 16 Recommended bracing with bracket plate for downstream locations.

The FEA model was modified to incorporate the stiffness of the bracing features. The new reaction forces and moments are summarized in Table 4. Recalculating for the Hilti recommended maximum loading of the base anchors is shown in Appendix K. The added stiffness from the bracing puts the anchor loading well below the limits defined in the Hilti Technical Guide.

Table 4: Reaction at column bases, Load Case #3 pinned connections with added bracing

COLUMN	A	B	C	D
FX	678.39	343.47	762.01	404.46
FY	3544.0	1897.3	2536.7	1566.9
FZ	47.33	-64.07	28.63	-11.88
MX	221.08	-13380	1412.1	-2494.6
MY	4.77	7.71	14.45	8.01
MZ	-74631	-33702	-80314	-37763

7Conclusions

7.1 The E906 Detector Support Frame design analyzed within this document under the assumptions presented in section **5** meets the requirements as set out in the acceptance criteria in section **3**.

7.2 Maintenance loading and Seismic loading do not cause any of the columns to buckle.

7.3 Connections are strong enough to handle much higher loads than what this structure is likely to encounter.

7.4 Further analysis indicates additional bracing, as recommended in Section 6.7, is required to avoid overloading the floor anchors in a seismic load case.

8References

1. AISC Steel Construction Manual 13th Edition
2. Hilti 2011 North American Product Technical Guide Volume 2: Anchor Fastening Technical Guide

9Computer Software Specifications

ANSYS R12.1 by ANSYS, Inc.

Mathcad 14.0 M020 (14.0.2.5) by Parametric Technology Corporation

Title: Finite Element Analysis of E906 Station 3 & 4 Detector Support Structure at Fermilab	
Calculation No.: **NE-EO-2011-003**	Revision Number: 3

APPENDIX 1
GENERAL CHECKING CRITERIA SHEET

CALCULATION CHECKLIST	Yes	No	N/A	Comments
1. Are analytical methods appropriate?	☐	☐	☐	
2. Are assumptions appropriate?	☐	☐	☐	
3. Is the calculation complete?	☐	☐	☐	
4. Is the calculation mathematically accurate?	☐	☐	☐	
5. Do calculation parameters comply with design criteria/dimensions?	☐	☐	☐	
6. Were input data appropriate?	☐	☐	☐	
7. Does the calculation reference or list applicable assumptions and major equation sources?	☐	☐	☐	
COMPUTER CODE CHECKLIST	**Yes**	**No**	**N/A**	**Comments**
1. Was an applicable and valid computer program used?	☐	☐	☐	
2. Are the input assumptions appropriate?	☐	☐	☐	
3. Was the input entered correctly?	☐	☐	☐	
4. Do the input results seem reasonable?	☐	☐	☐	

Title: Finite Element Analysis of E906 Station 3 & 4 Detector Support Structure at Fermilab	
Calculation No.: **NE-EO-2011-003**	Revision Number: 3

APPENDIX 1
GENERAL CHECKING CRITERIA SHEET

ADDITIONAL COMMENTS		
Number	**Comment**	**Resolution**
1.		
2.		
3.		
4.		
5.		
6.		
7.		
8.		
9.		
10.		

Appendices A-G Calculation back-up

See following pages.

Title: Finite Element Analysis of E906 Station 3 & 4 Detector Support Structure at Fermilab	
Calculation No.: **NE-EO-2011-003**	Revision Number: 3

A. Compressive strength for flexural buckling of members without slender elements (Section E3)

This calculation evaluates the strength of the W8x31 columns in the service beam support structure.

$b_f := 8.00 \cdot in$ $t_f := 0.435 \cdot in$ flange dimensions

$\lambda := \frac{b_f}{2 \cdot t_f} = 9.195$ width - thickness ratio of member

$E := 29000 \cdot ksi$ $F_y := 36 \cdot ksi$ material properties of A36 steel

$\lambda_p := 0.38 \cdot \sqrt{\frac{E}{F_y}} = 10.785$ limit for compact sections (Table B4.1)

$\lambda < \lambda_p$ therefore section is considered compact

$k := 1$ effective length factor determined in accordance with Section C2

$L := 197 \cdot in$ laterally unbraced length of member

$r := 3.47 \cdot in$ governing radius of gyration, taken from Table 1-1

$\frac{k \cdot L}{r} = 56.772$ column slenderness ratio

$4.71 \cdot \sqrt{\frac{E}{F_y}} = 133.681$ when slenderness ratio is less than this value, Equation E3-2 applies

$F_e := \frac{\pi^2 \cdot E}{\left(\frac{k \cdot L}{r}\right)^2} = 88.802 \cdot ksi$ first determine elastic critical buckling stress from Equation E3-4

$F_{cr} := \left(0.658^{\frac{F_y}{F_e}}\right) \cdot F_y = 30.382 \cdot ksi$ flexural buckling stress Equation E3-3

Title: Finite Element Analysis of E906 Station 3 & 4 Detector Support Structure at Fermilab	
Calculation No.: **NE-EO-2011-003**	Revision Number: 3

$A_g := 4.43 \cdot in^2$ gross cross sectional area of member from Table 1-1

$P_n := F_{cr} \cdot A_g = 134.591 \times 10^3 \cdot lbf$ nominal compressive strength

$\Omega_c := 1.67$ ASD Safety Factor

$\frac{P_n}{\Omega_c} = 8.059 \times 10^4 \cdot lbf$ allowable strength of column

$P := 5344 \cdot lbf$ applied load to column from FEA Case #2 results

$P < \frac{P_n}{\Omega_c}$ therefore, column has adequate strength

B. Doubly symmetric members in Flexure and Compression (Sect. H1.1):

$I_{yc} := \frac{b_f^3 \cdot t_f}{12} = 18.56 \cdot in^4$ moment of inertia about y-axis referred to the compression flange

$I_y := 37.1 \cdot in^4$ from Table 1-1

$\frac{I_{yc}}{I_y} = 0.5$ this value must be between 0.1 and 0.9 for Eqns. H1-1a and H1-1b to apply

$P_r := 5297 \cdot lbf$ required axial compressive strength from FEA Case #3 results

$P_c := \frac{P_n}{\Omega_c} = 8.059 \times 10^4 \cdot lbf$ available compressive strength from previous calculation

$\frac{P_r}{P_c} = 0.066$ For $\frac{P_r}{P_c} < 0.2$ Eqn H1-1b applies

To compute Eqn H1-1b, required flexural strength and available flexural strength mus be determined for both x-axis and y-axis from Chapter F

Title: Finite Element Analysis of E906 Station 3 & 4 Detector Support Structure at Fermilab	
Calculation No.: **NE-EO-2011-003**	Revision Number: 3

$\lambda := \frac{b_f}{2 \cdot t_f} = 9.195$ width - thickness ratio

$\lambda < \lambda_p$ therefore section is compact according to Table B4.1

The nominal flexural strength shall be the lower value according to the limit states of yielding and lateral-torsional buckling.

$L := 197 \cdot in$ length of beam

$M_{rx} := 73773 \cdot in \cdot lbf = 6.148 \times 10^3 \cdot ft \cdot lbf$ pplied moment on column from FEA ase #3 results

Section F2.1 Yielding:

$Z_x := 30.4 \cdot in^3$ plastic section modulus about x-axis, from Table 1-1

$F_y = 36 \cdot ksi$ minimum yield stress of A36 steel

$M_p := F_y \cdot Z_x = 9.12 \times 10^4 \cdot ft \cdot lbf$ plastic moment

$M_n := M_p$ nominal flexural strength

$\Omega_b := 1.67$ ASD Safety Factor

$M_a := \frac{M_n}{\Omega_b} = 5.461 \times 10^4 \cdot ft \cdot lbf$

Section F2.2 Lateral-torsional buckling (LTB):

$L_b := L = 197 \cdot in$ unbraced length of beam

$r = 3.47 \cdot in$ radius of gyration in x-axis, from Table 1-1

$L_p := 1.76 \cdot r \cdot \sqrt{\frac{E}{F_y}} = 173.336 \cdot in$ lower limit for LTB

Title: Finite Element Analysis of E906 Station 3 & 4 Detector Support Structure at Fermilab	
Calculation No.: **NE-EO-2011-003**	Revision Number: 3

The next row of parameters are needed to determine Lr, and are taken from Table 1-1

$S_x := 27.5 \cdot in^3 \quad r_{ts} := 2.26 \cdot in \quad J := 0.536 \cdot in^4 \quad h_o := 7.57 \cdot in$

$c := 1$ from (F2-8a)

$$L_r := 1.95 \cdot r_{ts} \cdot \frac{E}{0.7 \cdot F_y} \cdot \sqrt{\frac{J \cdot c}{S_x \cdot h_o}} \cdot \sqrt{1 + \sqrt{1 + 6.76 \cdot \left(\frac{0.7 \cdot F_y}{E} \cdot \frac{S_x \cdot h_o}{J \cdot c}\right)}} = 431.495 \cdot in$$

$L_p < L_b < L_r$ therefore nominal flexural strength for LTB determined by Equation F2-2

$C_b := 1$ permitted to be conservatively taken as 1.0 for all cases

$$M_n := C_b \cdot \left[M_p - (M_p - 0.7 \cdot F_y \cdot S_x) \cdot \left(\frac{L - L_p}{L_r - L_p}\right)\right] = 8.813 \times 10^4 \cdot ft \cdot lbf$$

$$M_a := \frac{M_n}{\Omega_b} = 5.277 \times 10^4 \cdot ft \cdot lbf$$

$M_{cx} := M_a = 5.277 \times 10^4 \cdot ft \cdot lbf$ the lesser of the two values for Ma

Section F6.1 Yielding in members bent about minor axis

$Z_y := 14.1 \cdot in^3 \quad S_y := 9.27 \cdot in^3$ parameters from Table 1-1

$M_p := F_y \cdot Z_y = 4.23 \times 10^4 \cdot ft \cdot lbf$

which must be less than $1.6 \cdot F_y \cdot S_y = 4.45 \times 10^4 \cdot ft \cdot lbf$

$M_n := M_p \qquad M_{cy} := \frac{M_n}{\Omega_c} = 2.533 \times 10^4 \cdot ft \cdot lbf$

$M_{ry} := 17 \cdot in \cdot lbf = 1.417 \cdot ft \cdot lbf$

Title: Finite Element Analysis of E906 Station 3 & 4 Detector Support Structure at Fermilab	
Calculation No.: **NE-EO-2011-003**	Revision Number: 3

So, now Eqn H1-1b can be checked

$$\frac{P_r}{2 \cdot P_c} + \left(\frac{M_{rx}}{M_{cx}} + \frac{M_{ry}}{M_{cy}}\right) = 0.149$$ which must less than 1.0

C. Welded connection of column to base plate:

$F_x := 579 \cdot lbf$ $F_y := 3683 \cdot lbf$ $F_z := 288 \cdot lbf$

$M_x := 24800 \cdot in \cdot lbf$ $M_y := -10 \cdot in \cdot lbf$ $M_z := 60830 \cdot in \cdot lbf$

reactions at base of column

$leg := 0.375 \cdot in$ $throat := \frac{leg}{\sqrt{2}} = 0.265 \cdot in$ size of weld and throat

total length of weld:

$$length_{weld} := 2 \cdot 7.995 \cdot in + 2 \cdot (7.995 \cdot in - 0.435 \cdot in) + 2 \cdot (8 \cdot in - 2 \cdot 0.435 \cdot in) = 45.37 \cdot in$$

$$area_{weld} := length_{weld} \cdot throat = 12.031 \cdot in^2$$

Weld has greater area and moment of inertia than the column

D. Allowable combined tension & shear on bolts for the base plate (Hilti Tech. Guide):

Determine shear force:

$$V_d := \sqrt{F_x^{\,2} + F_z^{\,2}} = 646.672 \cdot lbf$$ Sum of shear forces

Determine maximum tensile force on bolts for the base plate:

$n := 1$ number of bolts $d := 0.75 \cdot in$ nominal bolt diameter

$$A_b := n \cdot \left(\frac{\pi}{4} \cdot d^2\right) = 0.442 \cdot in^2$$ area of bolts

Title: Finite Element Analysis of E906 Station 3 & 4 Detector Support Structure at Fermilab	
Calculation No.: **NE-EO-2011-003**	Revision Number: 3

$I_{xx} := 60.25 \cdot in^4$ $\quad I_{yy} := I_{xx}$ moments of inertia for bolt pattern

$c := 5 \cdot in$ distance of bolt from neutral axis

Stress in bolt from X-moment and Z-moment:

$$sigma_x := \frac{M_x \cdot c}{I_{xx}} = 2.058 \times 10^3 \cdot psi \qquad sigma_z := \frac{M_z \cdot c}{I_{yy}} = 5.048 \times 10^3 \cdot psi$$

$$sigma := sigma_x + sigma_z = 7.106 \times 10^3 \cdot psi$$

$N_d := sigma \cdot A_b = 3.139 \times 10^3 \cdot lbf$ equivalent tensile force on bolt:

Hilti design requirements:

$N_{allow} := 4065 \cdot lbf$ allowable tensile force (Section 3.3.9, Table 2 of Hilti Tech Guide)

$V_{allow} := 5000 \cdot lbf$ allowable shear force (Section 3.3.9, Table 2 of Hilti Tech Guide)

$f_A := 0.88$ load adjustment factor for anchor spacing

$f_{seismic} := 1.333$ load adjustment factor for seismic loading

$N_{rec} := N_{allow} \cdot f_A \cdot f_A \cdot f_{seismic} = 4.196 \times 10^3 \, lbf$ Recommended tensile load

$V_{rec} := V_{allow} \cdot f_A \cdot f_A \cdot f_{seismic} = 5.161 \times 10^3 \, lbf$ Recommended shear load

$$\left(\frac{V_d}{V_{rec}}\right)^{\frac{5}{3}} + \left(\frac{N_d}{N_{rec}}\right)^{\frac{5}{3}} = 0.648$$ This result must less than or equal to 1

Title: Finite Element Analysis of E906 Station 3 & 4 Detector Support Structure at Fermilab	
Calculation No.: **NE-EO-2011-003**	Revision Number: 3

E. Bearing strength at base plate bolt holes (Section J3.10):

$F_u := 58 \cdot ksi$ minimum tensile strength of the material

$L_c := \frac{9}{16} \cdot in$ clear distance from edge of hole to edge of material

$t := 1 \cdot in$ thickness of material

$R_n := 1.0 \cdot L_c \cdot t \cdot F_u = 32.625 \times 10^3 \cdot lbf$ nominal bearing strength, Equation (J3-6c)

$\Omega := 2.00$ ASD safety factor

$R_a := \frac{R_n}{\Omega} = 16.312 \times 10^3 \cdot lbf$ allowable bearing strength

F. Weld shear strength in weld between beam and column:

(From photo and measurements, appears to be 3/8" fillet, 8" in length, both sides)

$throat := \frac{0.375 \cdot in}{\sqrt{2}} = 0.265 \cdot in$ throat of 3/8" fillet weld

$A_w := (throat \cdot 8 \cdot in) \cdot 2 = 4.243 \cdot in^2$ area of weld

$F_{EXX} := 60 \cdot ksi$ Ultimate tensile strength of filler metal

$F_w := 0.60 \cdot F_{EXX} = 36.000 \times 10^3 \cdot psi$ Nominal tensile strength of filler metal

$R_n := F_w \cdot A_w = 152.735 \times 10^3 \cdot lbf$ Nominal strength of weld

$\Omega := 2.00$ ASD Safety Factor

$R_a := \frac{R_n}{\Omega} = 76.368 \times 10^3 \cdot lbf$ Allowable shear strength of fillet weld

Title: Finite Element Analysis of E906 Station 3 & 4 Detector Support Structure at Fermilab	
Calculation No.: **NE-EO-2011-003**	Revision Number: 3

G. Allowable shear on bolts (Section J3.6) for the beam to beam connection:

$F_{nv} := 48 \cdot ksi$ nominal shear stress from Table J3.2

$n := 4$ number of bolts $d := 0.5 \cdot in$ nominal bolt diameter

$A_b := n \cdot \left(\frac{\pi}{4} \cdot d^2\right) = 0.785 \cdot in^2$ area of bolts

$R_n := F_{nv} \cdot A_b = 37.699 \times 10^3 \cdot lbf$ nominal shear strength of bolted connection (J3-1)

$\Omega := 2.00$ ASD safety factor

$R_a := \frac{R_n}{\Omega} = 18.85 \times 10^3 \cdot lbf$ allowable shear strength

Title: Finite Element Analysis of E906 Station 3 & 4 Detector Support Structure at Fermilab	
Calculation No.: **NE-EO-2011-003**	Revision Number: 3

H. Compressive strength for flexural buckling of members without slender elements (Section E3)

This calculation evaluates the strength of the W6x15 columns in the service beam support structure.

$b := 14.2 \cdot .2333 \cdot in = 3.313\,in$ $\quad t := 0.2333 \cdot in$ flange dimensions

$\lambda := \frac{b}{t} = 14.2$ width - thickness ratio of member

$E := 29000 \cdot ksi$ $\quad F_y := 36 \cdot ksi$ material properties of A36 steel

$\lambda_p := 1.12 \cdot \sqrt{\frac{E}{F_y}} = 31.788$ limit for compact sections (Table B4.1)

$\lambda_r := 1.40 \cdot \sqrt{\frac{E}{F_y}} = 39.735$ limit for noncompact sections (Table B4.1)

therefore section is considered compact

$k := 1$ effective length factor determined in accordance with Section C2

$L := \sqrt{(16 \cdot in)^2 + (24 \cdot in)^2} = 28.844\,in$ laterally unbraced length of member

$r := 1.52 \cdot in$ governing radius of gyration, taken from Table 1-1

$\frac{k \cdot L}{r} = 18.977$ brace slenderness ratio

$4.71 \cdot \sqrt{\frac{E}{F_y}} = 133.681$ when slenderness ratio is less than this value, Equation E3-2 applies

$F_e := \frac{\pi^2 \cdot E}{\left(\frac{k \cdot L}{r}\right)^2} = 794.807 \cdot ksi$ first determine elastic critical buckling stress from Equation E3-4

Title: Finite Element Analysis of E906 Station 3 & 4 Detector Support Structure at Fermilab	
Calculation No.: **NE-EO-2011-003**	Revision Number: 3

$F_{cr} := \left(0.658^{\frac{F_y}{F_e}}\right) \cdot F_y = 35.324 \cdot ksi$ flexural buckling stress Equation E3-2

$A_g := 3.37 \cdot in^2$ gross cross sectional area of member from Table 1-1

$P_n := F_{cr} \cdot A_g = 119.042 \times 10^3 \cdot lbf$ nominal compressive strength

$\Omega_c := 1.67$ ASD Safety Factor

$\frac{P_n}{\Omega_c} = 71.282 \times 10^3 \cdot lbf$ allowable strength of brace

$P_x := 2325 \cdot lbf$ horizontal component of applied load

$P_y := 3308 \cdot lbf$ vertical component of applied load

$P := \sqrt{P_x^2 + P_y^2} = 4.043 \times 10^3 \, lbf$ total applied load to brace

$P < \frac{P_n}{\Omega_c}$ therefore, brace has adequate strength

Analysis of weld of brace to structure:

$F_{EXX} := 70$ strength of weld metal in ksi

$D := 4$ weld size in number of sixteenths of an inch

$L := 4$ length of weld in inches

$R_n := 0.6 \cdot F_{EXX} \cdot \frac{\sqrt{2}}{2} \cdot \frac{D}{16} \cdot L = 29.698$ nominal load in kips

$\Omega := 2.00$ ASD safety factor

$\frac{R_n}{\Omega} = 14.849$ allowable load for weld in kips

Title: Finite Element Analysis of E906 Station 3 & 4 Detector Support Structure at Fermilab	
Calculation No.: **NE-EO-2011-003**	Revision Number: 3

I. Bracket Plates in Part 15

$\Omega := 1.67$ ASDsafety factor $Fy := 36 \cdot ksi$ Yield strength of A36 steel

$a := 21.25 \cdot in$ $b := 16 \cdot in$ $t := 0.5 \cdot in$ nominal dimensions of plate

$z := 1.39 - 2.2 \cdot \left(\frac{b}{a}\right) + 1.27 \cdot \left(\frac{b}{a}\right)^2 - 0.25 \cdot \left(\frac{b}{a}\right)^3 = 0.347$ parameter used in eqn below

$P_n := Fy \cdot z \cdot b \cdot t = 99.88 \times 10^3\ lbf$ nominal maximum load for plate

$\frac{P_n}{\Omega} = 59.808 \times 10^3\ lbf$ allowable maximum load for plate

Width - thickness ratio to prevent local buckling

for 0.5<b/a<1.0 $\frac{b}{a} = 0.753$

$\frac{b}{t} = 32$ must be less than $\frac{250}{\sqrt{36}} = 41.667$

Title: Finite Element Analysis of E906 Station 3 & 4 Detector Support Structure at Fermilab	
Calculation No.: **NE-EO-2011-003**	Revision Number: 3

J. Table 8-8 Eccentrically Loaded Weld Groups (Angle=30 deg:

$\Omega := 2.00$ ASD Safety Factor

$P := 3.6$ required force in kips

$D := 4$ number of sixteenths of an inch in the fillet weld size

$L := 21.25$ characteristic length of weld group in inches

$e_x := 11.625$ horizontal component of eccentricity of load P

$a := \frac{e_x}{L} = 0.547$ coefficient used to detrmine C

$k := \frac{3}{L} = 0.141$ coefficient used to determine C

$C_1 := 1$ $C := 1.36$

$L_{min} := \frac{\Omega \cdot P}{C \cdot C_1 \cdot D} = 1.324$ minimum characteristic length for weld group

$L > L_{min}$ weld group is adequate for load

Title: Finite Element Analysis of E906 Station 3 & 4 Detector Support Structure at Fermilab	
Calculation No.: **NE-EO-2011-003**	Revision Number: 3

K. Revised allowable combined tension & shear on bolts for the base plate (Hilti Tech. Guide):

Determine shear force: $V_x := 762 \cdot lbf$ $V_z := 29 \cdot lbf$

$V_d := \sqrt{V_x^2 + V_z^2} = 762.552 \cdot lbf$ Sum of shear forces

Determine maximum tensile force on bolts for the base plate:

$n := 1$ number of bolts $d := 0.75 \cdot in$ nominal bolt diameter

$A_b := n \cdot \left(\frac{\pi}{4} \cdot d^2\right) = 0.442 \cdot in^2$ area of bolts

$I_{xx} := 60.25 \cdot in^4$ $I_{yy} := I_{xx}$ moments of inertia for bolt pattern

$c := 5 \cdot in$ distance of bolt from neutral axis

Stress in bolt from X-moment and Z-moment:

$M_x := 1412 \cdot in \cdot lbf$ $M_z := 80314 \cdot in \cdot lbf$

$sigma_x := \frac{M_x \cdot c}{I_{xx}} = 117.178 \cdot psi$ $sigma_z := \frac{M_z \cdot c}{I_{yy}} = 6.665 \times 10^3 \cdot psi$

$sigma := sigma_x + sigma_z = 6.782 \times 10^3 \cdot psi$

$N_d := sigma \cdot A_b = 2.996 \times 10^3 \cdot lbf$ equivalent tensile force on bolt:

Hilti design requirements:

$N_{allow} := 4065 \cdot lbf$ allowable tensile force (Section 3.3.9, Table 2 of Hilti Tech Guide)

$V_{allow} := 5000 \cdot lbf$ allowable shear force (Section 3.3.9, Table 2 of Hilti Tech Guide)

$f_A := 0.88$ load adjustment factor for anchor spacing

$f_{seismic} := 1.333$ load adjustment factor for seismic loading

Title: Finite Element Analysis of E906 Station 3 & 4 Detector Support Structure at Fermilab	
Calculation No.: **NE-EO-2011-003**	Revision Number: 3

$N_{rec} := N_{allow} \cdot f_A \cdot f_A \cdot f_{seismic} = 4.196 \times 10^3 \cdot lbf$ Recommended tensile load

$V_{rec} := V_{allow} \cdot f_A \cdot f_A \cdot f_{seismic} = 5.161 \times 10^3 \cdot lbf$ Recommended shear load

$$\left(\frac{V_d}{V_{rec}}\right)^{\frac{5}{3}} + \left(\frac{N_d}{N_{rec}}\right)^{\frac{5}{3}} = 0.612$$

This result must less than or equal to 1