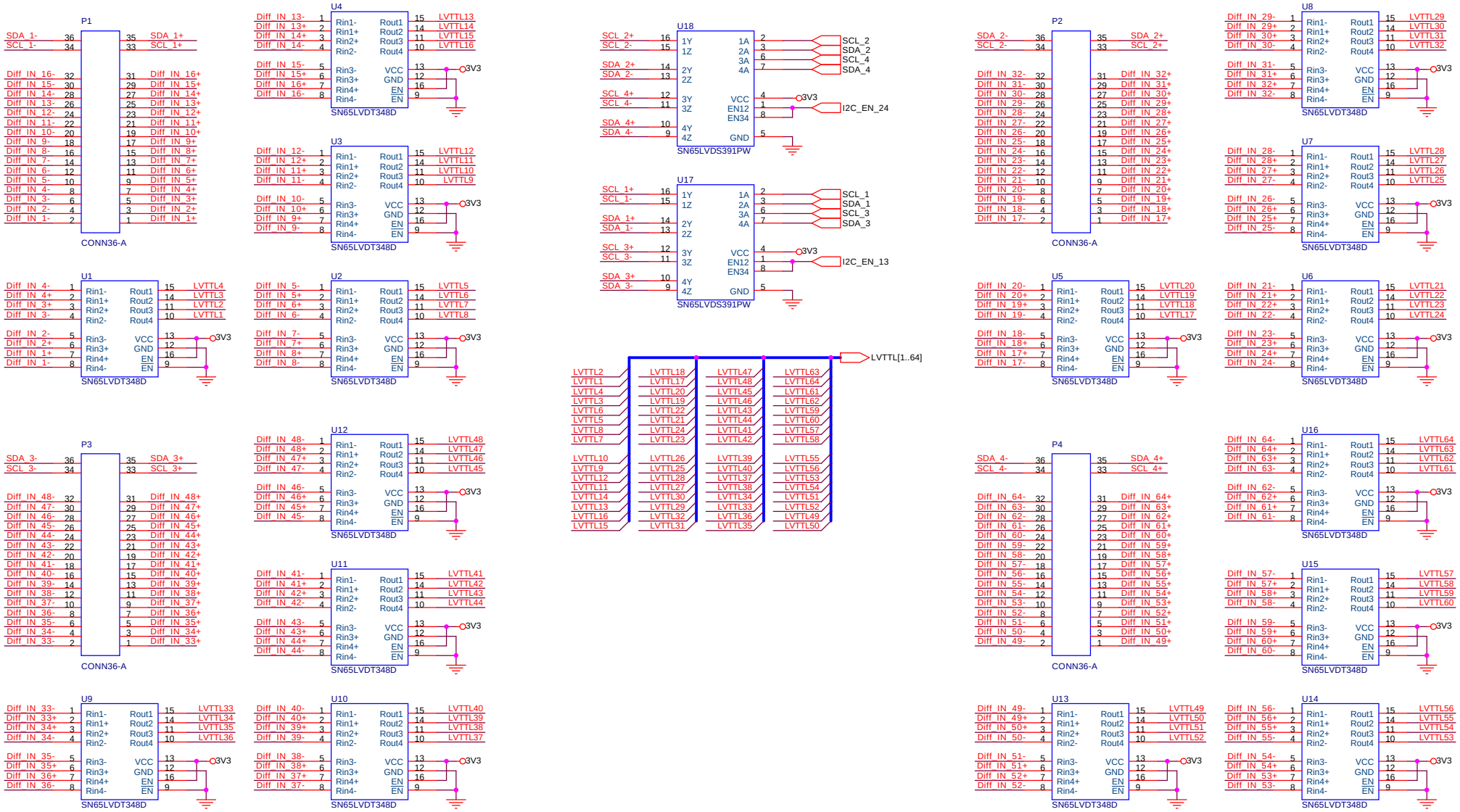

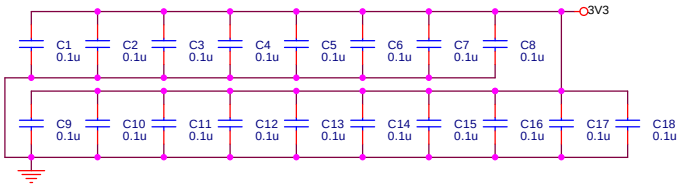

SCHEMATIC DIAGRAM NOTES

1.UNLESS STATED OTHERWISE:
  A.ALL RESISTOR ARE IN OHMS, 1% TOLERANCE.
  B.ALL CAPACITORS ARE IN MICROFARADS,10% TOLERANCE.

Da-Shung Su

Institute of Physics Academia Sinica
Nankang
Taipei, 11529
Taiwan, R.O.C.

Title: E906 VME v2 Board

Size	Document Number	Rev
A3	<Doc>	A

Date: Tuesday, August 17, 2010 Sheet 1 of 14

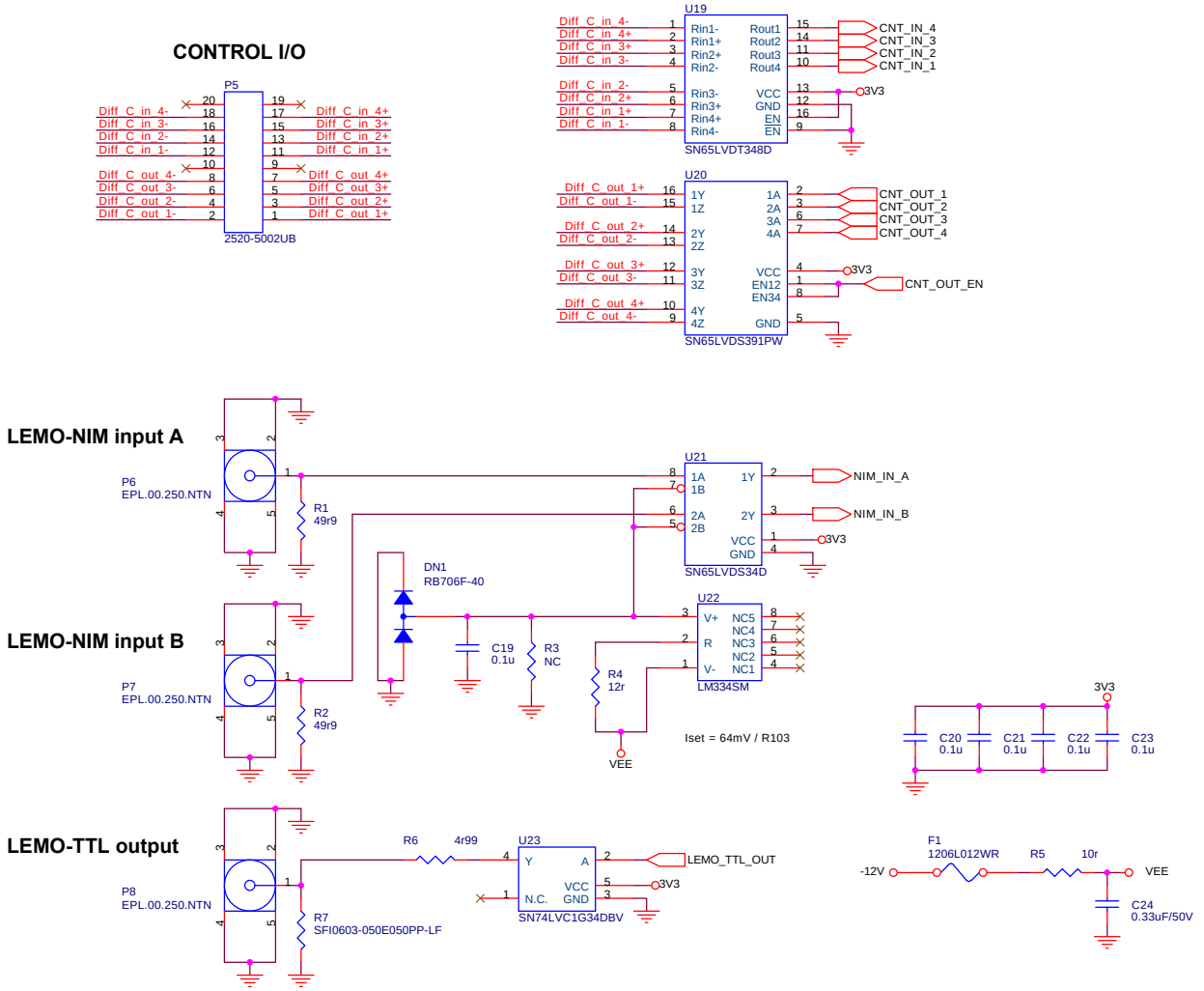

Da-Shung Su

Institute of Physics Academia Sinica
Nankang
Taipei, 11529
Taiwan, R.O.C.

Title
Front-End Interface

Size	Document Number	Rev
A3	<Doc>	A

Date: Tuesday, August 17, 2010 Sheet 2 of 14

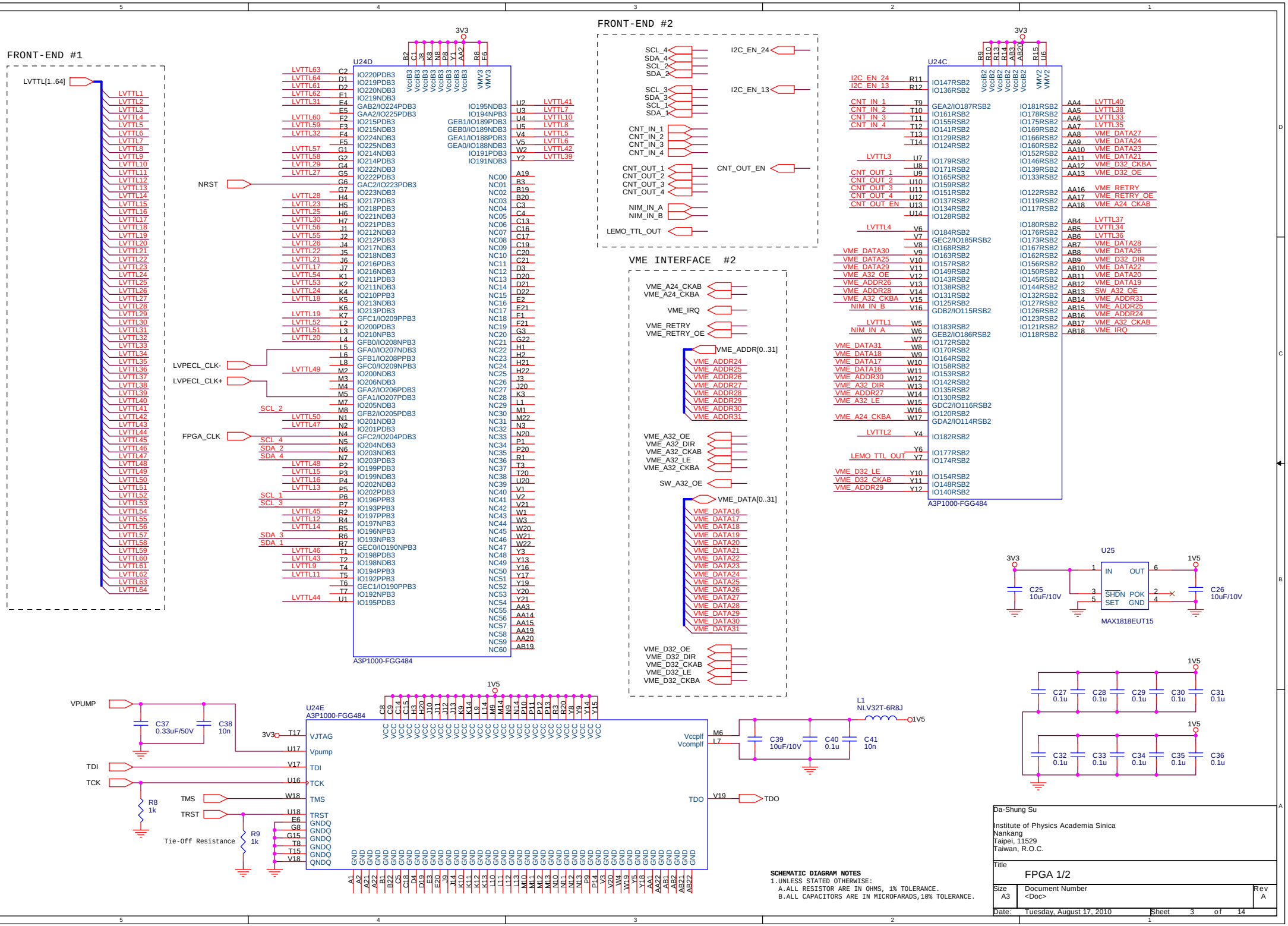

SCHEMATIC DIAGRAM NOTES

1.UNLESS STATED OTHERWISE:
A.ALL RESISTOR ARE IN OHMS, 1% TOLERANCE.
B.ALL CAPACITORS ARE IN MICROFARADS,10% TOLERANCE.

Da-Shung Su

Institute of Physics Academia Sinica
Nankang
Taipei, 11529
Taiwan, R.O.C.

Title: FPGA 1/2

Size	Document Number	Rev
A3	<Doc>	A

Date: Tuesday, August 17, 2010 Sheet 3 of 14

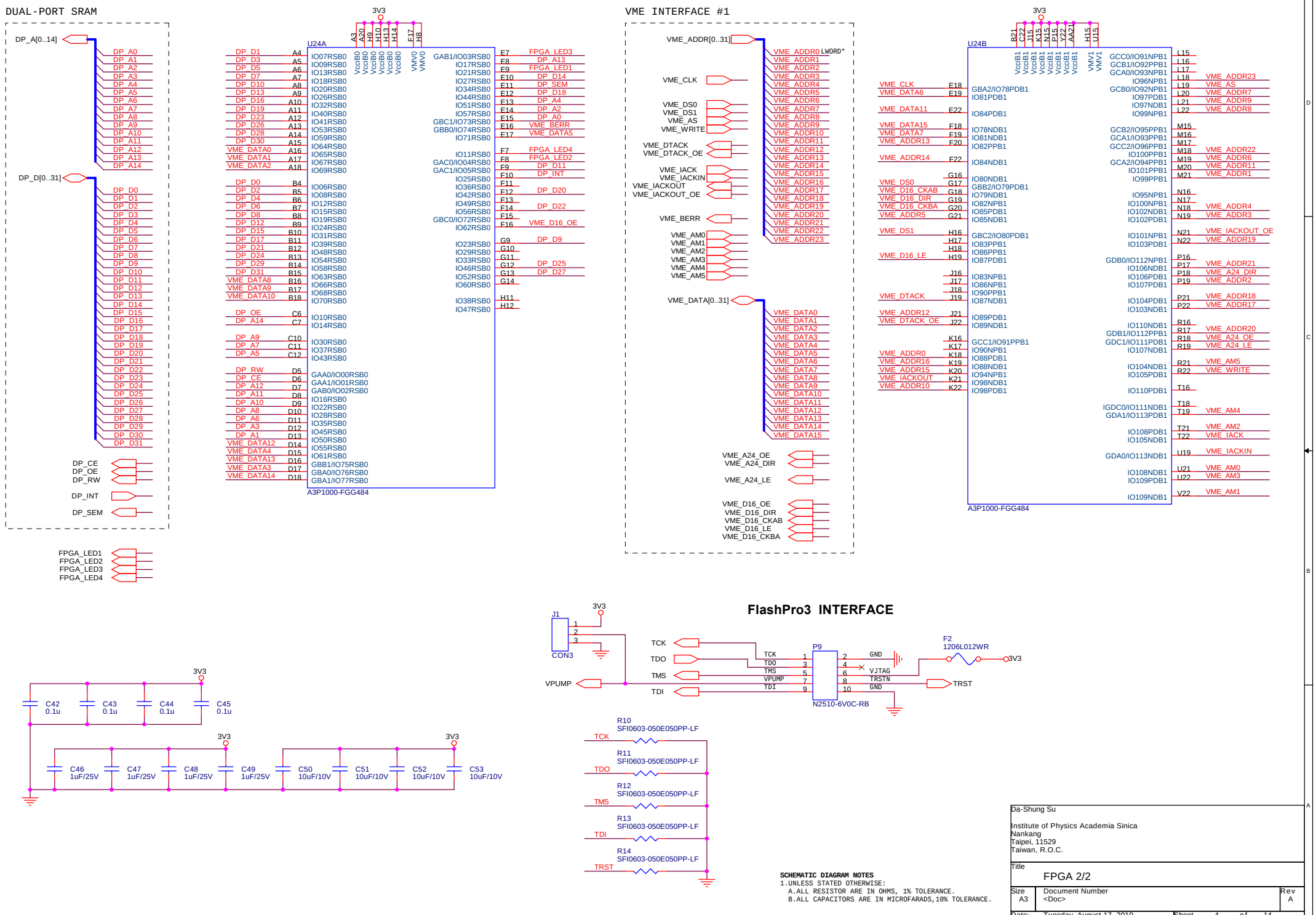
DUAL-PORT SRAM
U24A
A3P1000-FGG484
VME INTERFACE #1
U24B
A3P1000-FGG484
FlashPro3 INTERFACE
J1
CON3
P9
N2510-6V0C-RB
F2
1206L012WR
C42 0.1u
C43 0.1u
C44 0.1u
C45 0.1u
C46 1uF/25V
C47 1uF/25V
C48 1uF/25V
C49 1uF/25V
C50 10uF/10V
C51 10uF/10V
C52 10uF/10V
C53 10uF/10V
R10 SFI0603-050E050PP-LF
R11 SFI0603-050E050PP-LF
R12 SFI0603-050E050PP-LF
R13 SFI0603-050E050PP-LF
R14 SFI0603-050E050PP-LF
SCHEMATIC DIAGRAM NOTES
1.UNLESS STATED OTHERWISE:
A.ALL RESISTOR ARE IN OHMS, 1% TOLERANCE.
B.ALL CAPACITORS ARE IN MICROFARADS,10% TOLERANCE.
Da-Shung Su
Institute of Physics Academia Sinica
Nankang
Taipei, 11529
Taiwan, R.O.C.
Title
FPGA 2/2
Size A3
Document Number <Doc>
Rev A
Date: Tuesday, August 17, 2010
Sheet 4 of 14

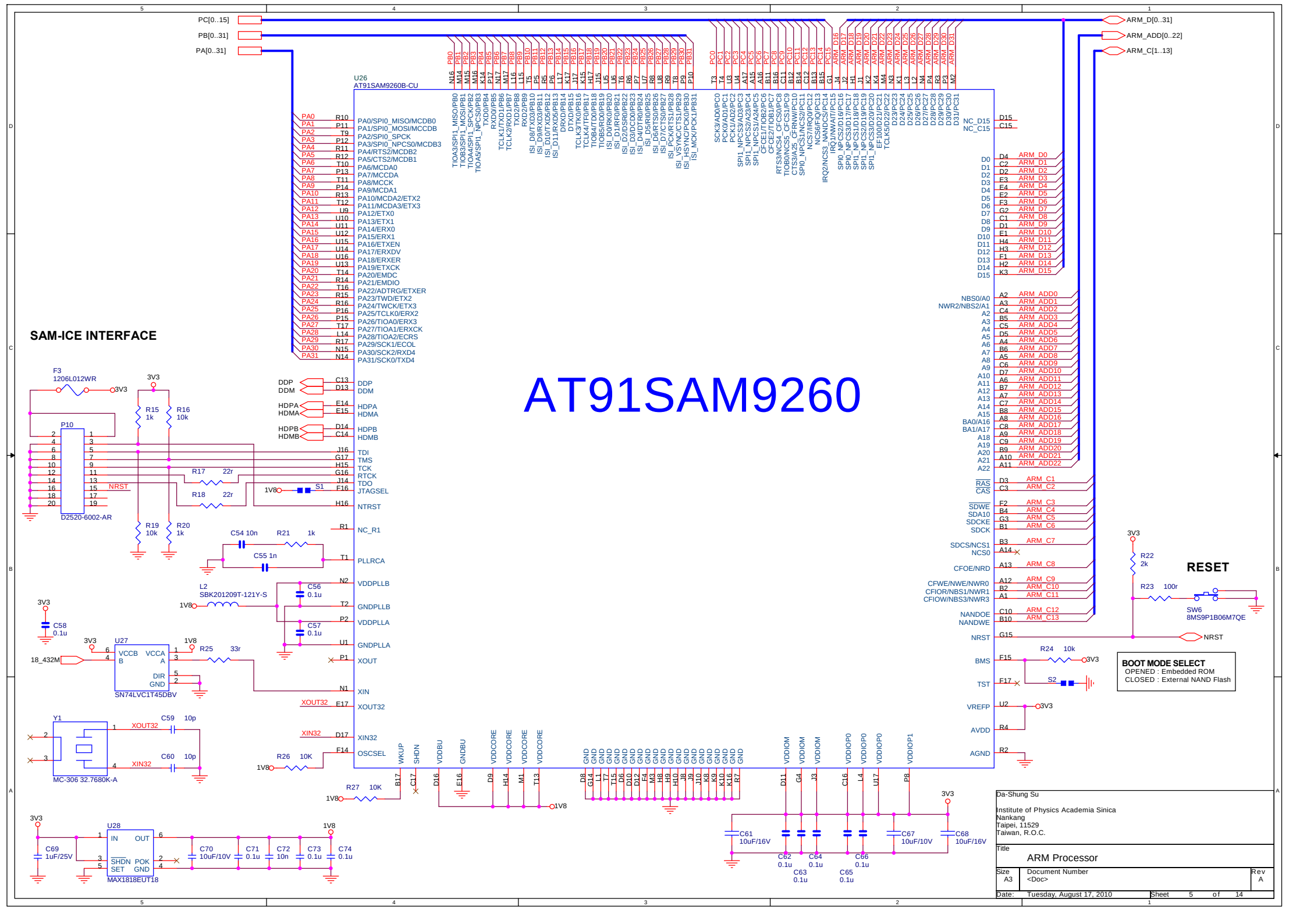
AT91SAM9260
U26
AT91SAM9260B-CU
SAM-ICE INTERFACE
RESET
BOOT MODE SELECT
OPENED : Embedded ROM
CLOSED : External NAND Flash
PC[0..15]
PB[0..31]
PA[0..31]
ARM_D[0..31]
ARM_ADD[0..22]
ARM_C[1..13]
F3
1206L012WR
P10
D2520-6002-AR
U27
SN74LVC1T45DBV
U28
MAX1818EUT18
Y1
MC-306 32.7680K-A
L2
SBK201209T-121Y-S
SW6
8MS9P1B06M7QE
Da-Shung Su
Institute of Physics Academia Sinica
Nankang
Taipei, 11529
Taiwan, R.O.C.
Title
ARM Processor
Size
A3
Document Number
<Doc>
Rev
A
Date:
Tuesday, August 17, 2010
Sheet
5
of
14

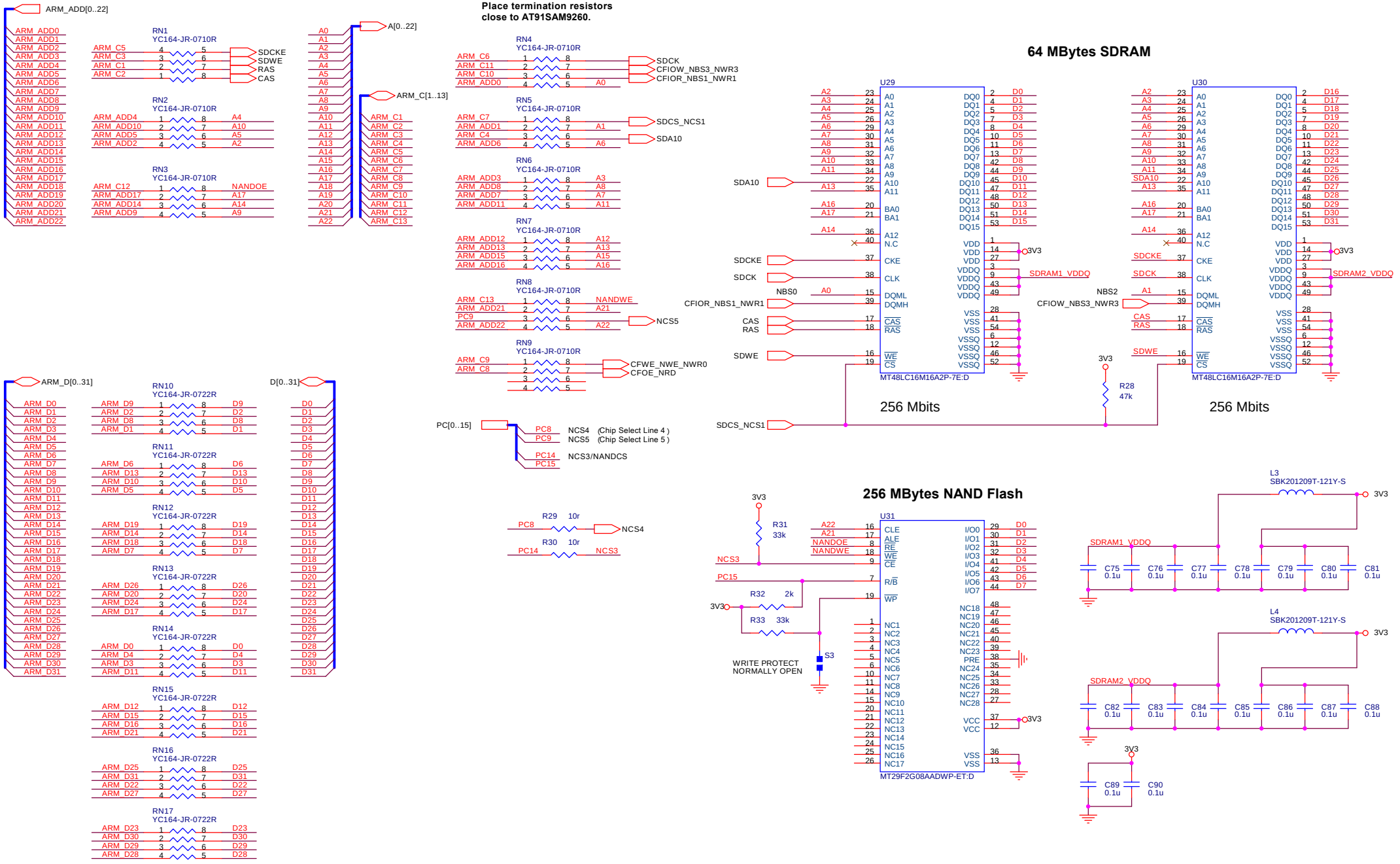

SCHEMATIC DIAGRAM NOTES
1.UNLESS STATED OTHERWISE:
A.ALL RESISTOR ARE IN OHMS, 1% TOLERANCE.
B.ALL CAPACITORS ARE IN MICROFARADS,10% TOLERANCE.

Da-Shung Su

Institute of Physics Academia Sinica
Nankang
Taipei, 11529
Taiwan, R.O.C.

Title: System Memory

Size	Document Number	Rev
A3	<Doc>	A

Date: Tuesday, August 17, 2010 Sheet 6 of 14

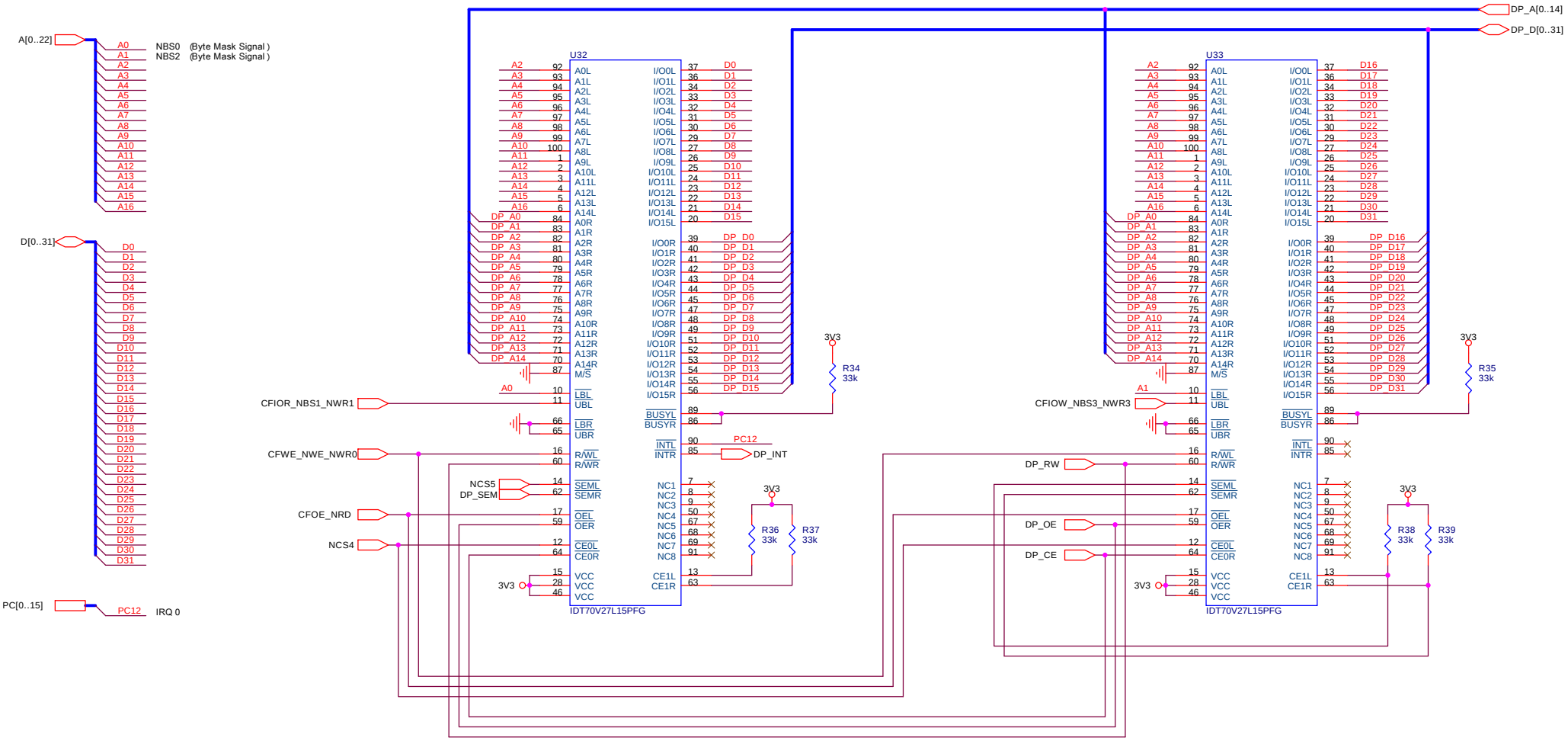

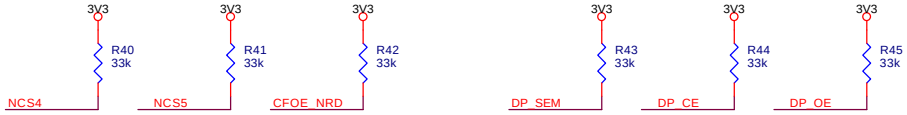

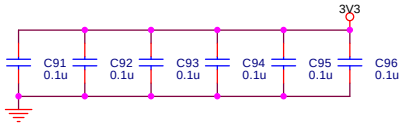

SCHEMATIC DIAGRAM NOTES
1.UNLESS STATED OTHERWISE:
A.ALL RESISTOR ARE IN OHMS, 1% TOLERANCE.
B.ALL CAPACITORS ARE IN MICROFARADS,10% TOLERANCE.

Da-Shung Su

Institute of Physics Academia Sinica
Nankang
Taipei, 11529
Taiwan, R.O.C.

Title
32K x 32 Dual-Port SRAM

Size	Document Number	Rev
A3	<Doc>	A

Date: Tuesday, August 17, 2010 Sheet 7 of 14

Media Independent Interface

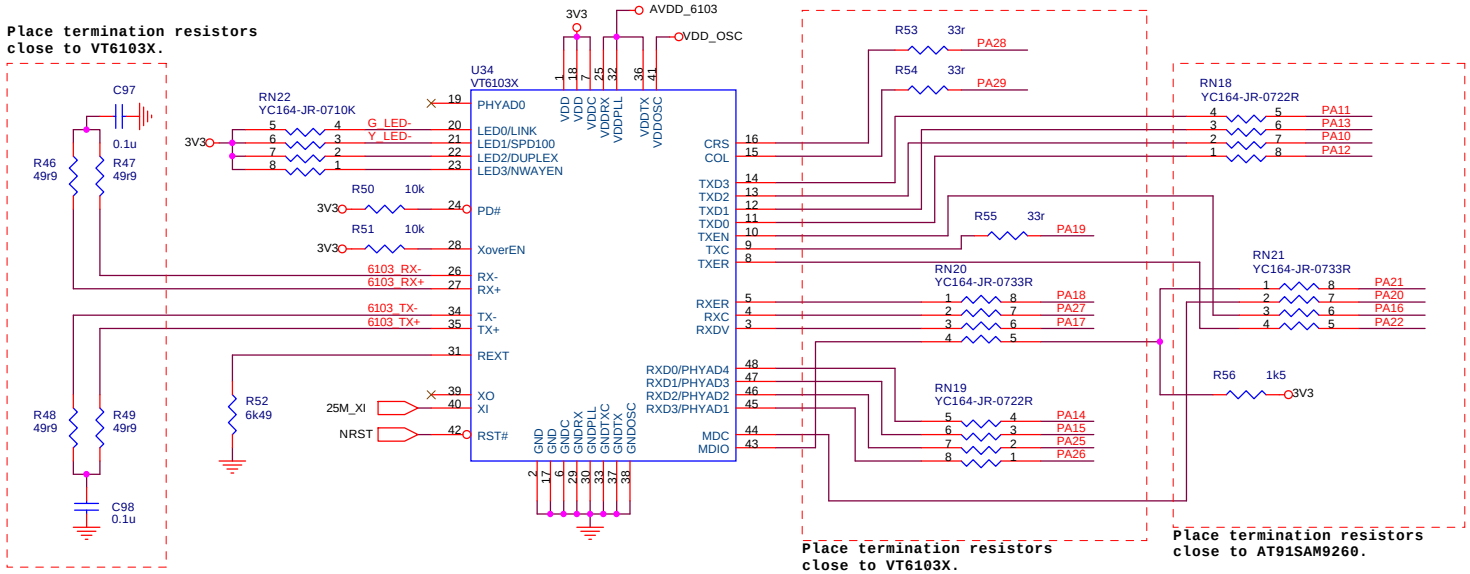

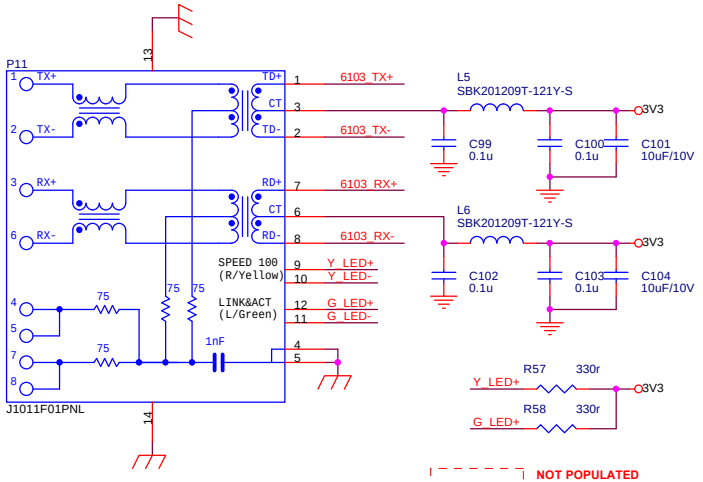

RJ45 ETHERNET CONNECTOR

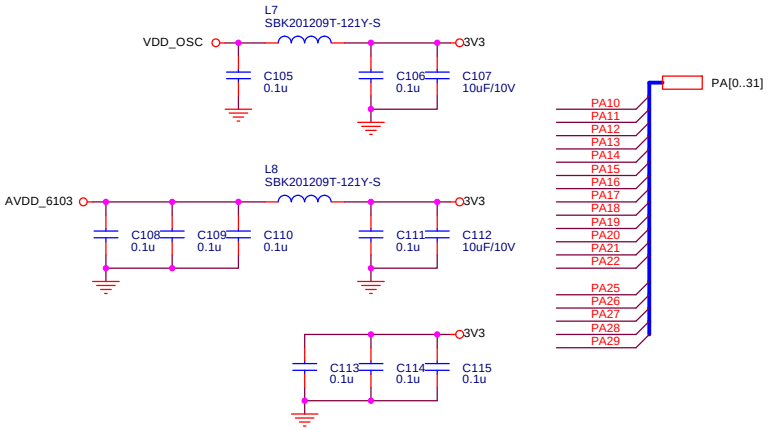

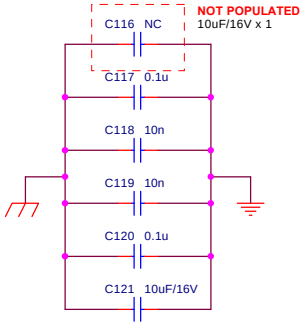

SCHEMATIC DIAGRAM NOTES
1.UNLESS STATED OTHERWISE:
A.ALL RESISTOR ARE IN OHMS, 1% TOLERANCE.
B.ALL CAPACITORS ARE IN MICROFARADS,10% TOLERANCE.

Da-Shung Su

Institute of Physics Academia Sinica
Nankang
Taipei, 11529
Taiwan, R.O.C.

Title: 10/100M Fast Ethernet

Size	Document Number	Rev
A3	<Doc>	A

Date: Tuesday, August 17, 2010 Sheet 8 of 14

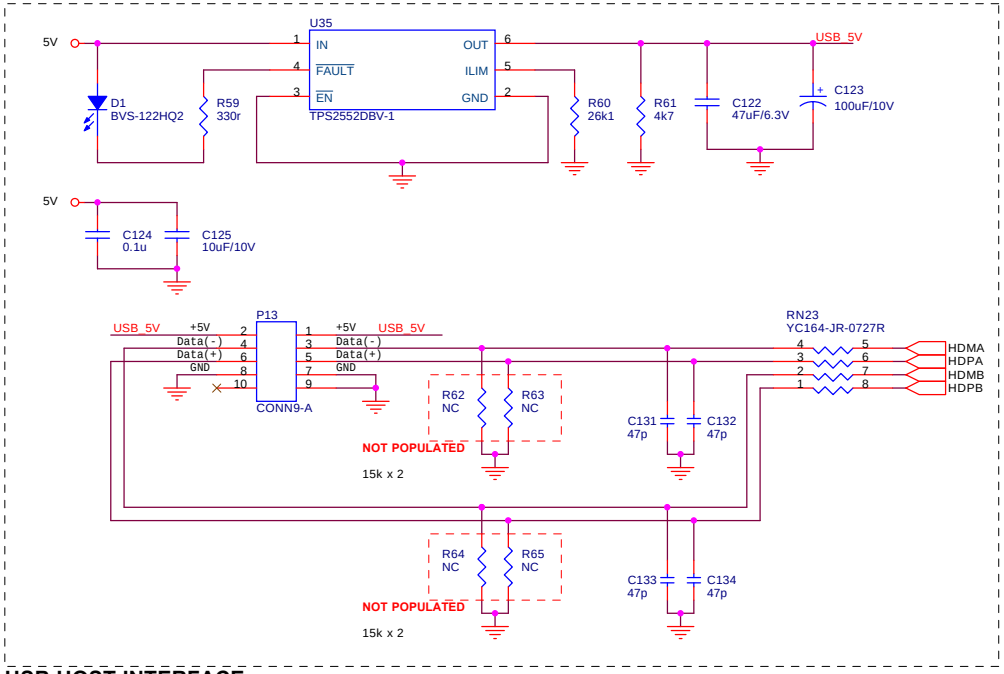

USB HOST INTERFACE

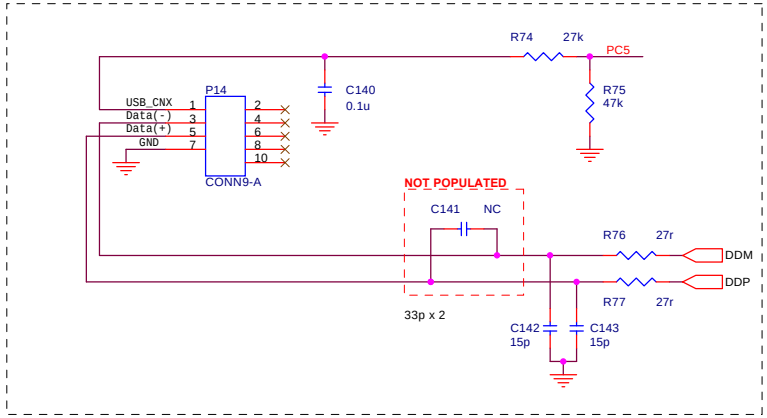

USB DEVICE INTERFACE

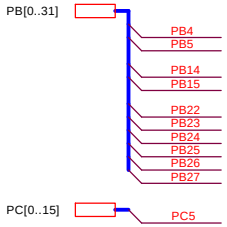

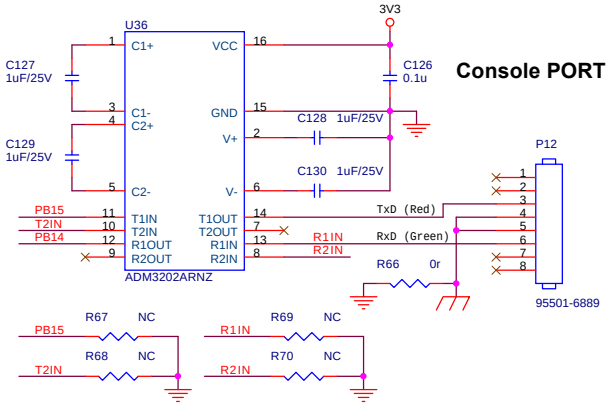

Console PORT (DTE)

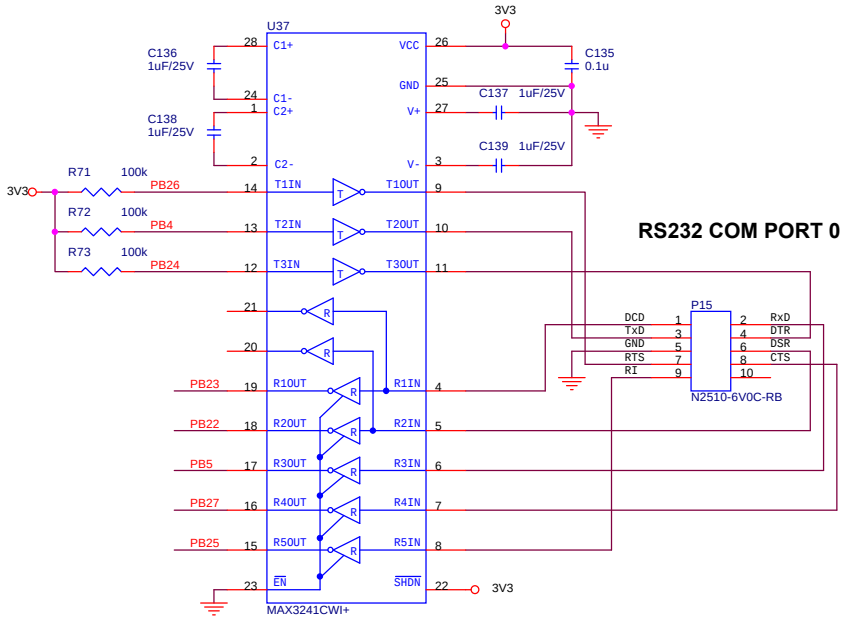

RS232 COM PORT 0

SCHEMATIC DIAGRAM NOTES

1.UNLESS STATED OTHERWISE:
A.ALL RESISTOR ARE IN OHMS, 1% TOLERANCE.
B.ALL CAPACITORS ARE IN MICROFARADS,10% TOLERANCE.

Da-Shung Su

Institute of Physics Academia Sinica
Nankang
Taipei, 11529
Taiwan, R.O.C.

Title	USB / Serial IO
Size A3	Document Number <Doc>
Rev	A
Date:	Tuesday, August 17, 2010
Sheet	9 of 14

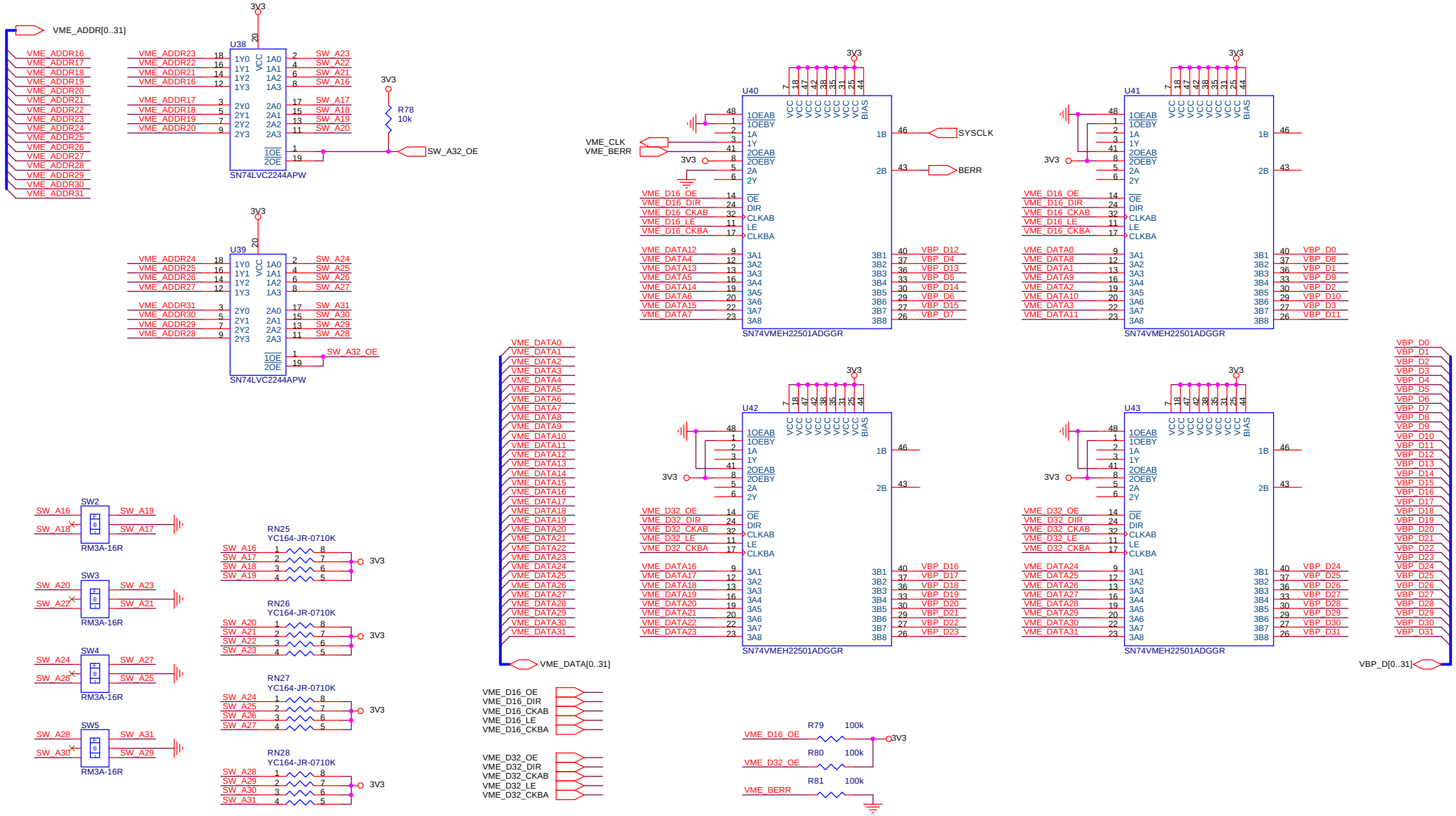

SCHEMATIC DIAGRAM NOTES
1.UNLESS STATED OTHERWISE:
A.ALL RESISTOR ARE IN OHMS, 1% TOLERANCE.
B.ALL CAPACITORS ARE IN MICROFARADS,10% TOLERANCE.

Da-Shung Su

Institute of Physics Academia Sinica
Nankang
Taipei, 11529
Taiwan, R.O.C.

Title
VME Bus Buffer & Addressing rotary switches

Size	Document Number	Rev
A3	<Doc>	A

Date: Tuesday, August 17, 2010 Sheet 10 of 14

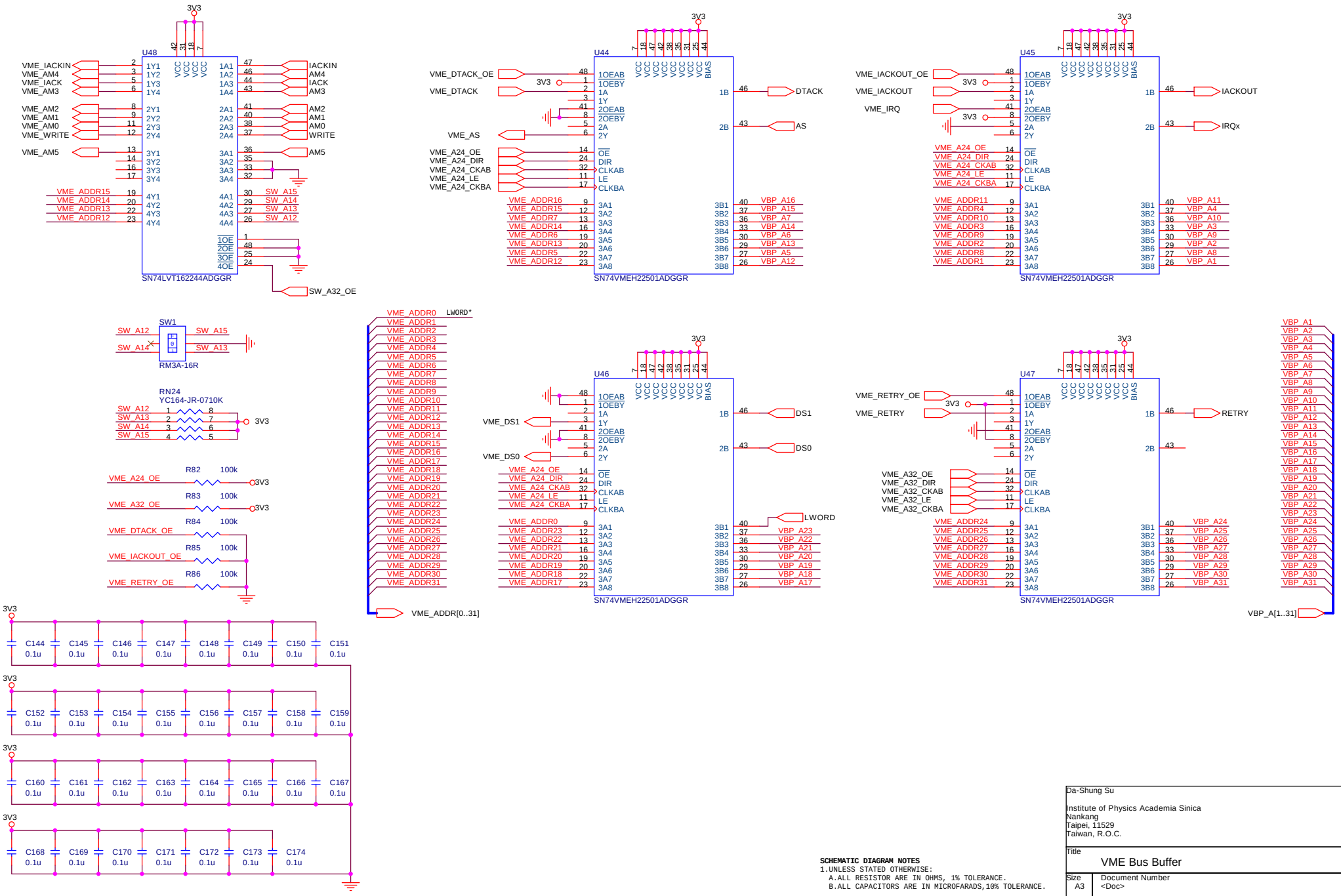

SCHEMATIC DIAGRAM NOTES
1.UNLESS STATED OTHERWISE:
A.ALL RESISTOR ARE IN OHMS, 1% TOLERANCE.
B.ALL CAPACITORS ARE IN MICROFARADS,10% TOLERANCE.

Da-Shung Su

Institute of Physics Academia Sinica
Nankang
Taipei, 11529
Taiwan, R.O.C.

Title
VME Bus Buffer

Size	Document Number	Rev
A3	<Doc>	A

Date: Tuesday, August 17, 2010 Sheet 11 of 14

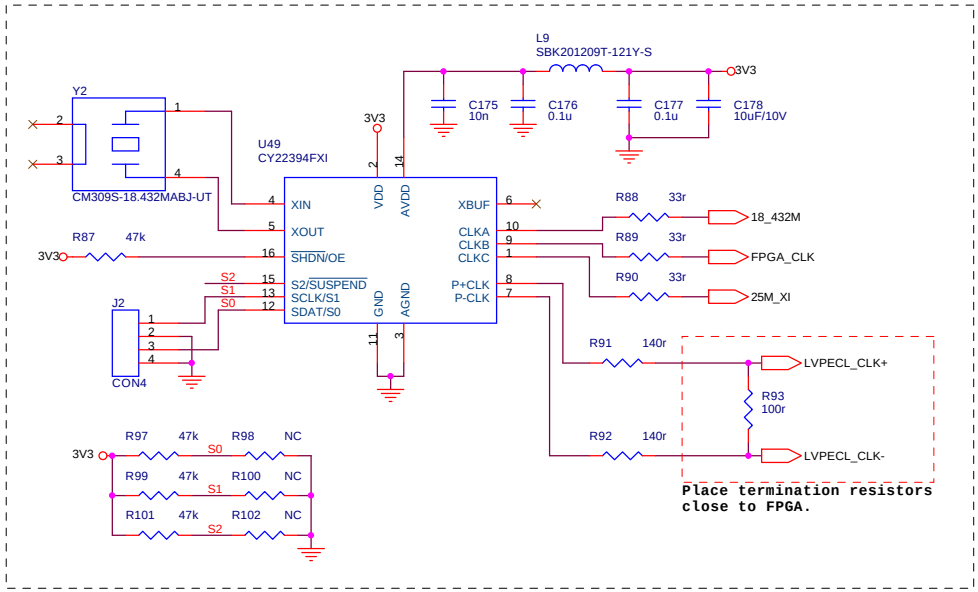

Flash-Programmable Clock Generator

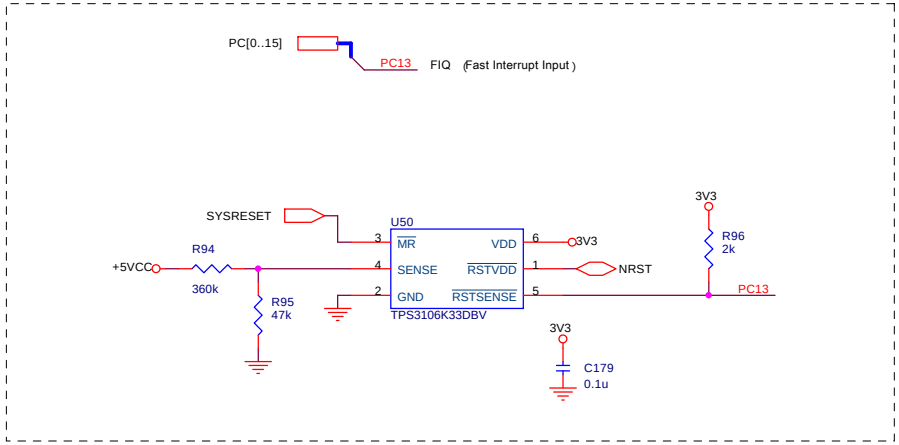

Supervisory Circuit

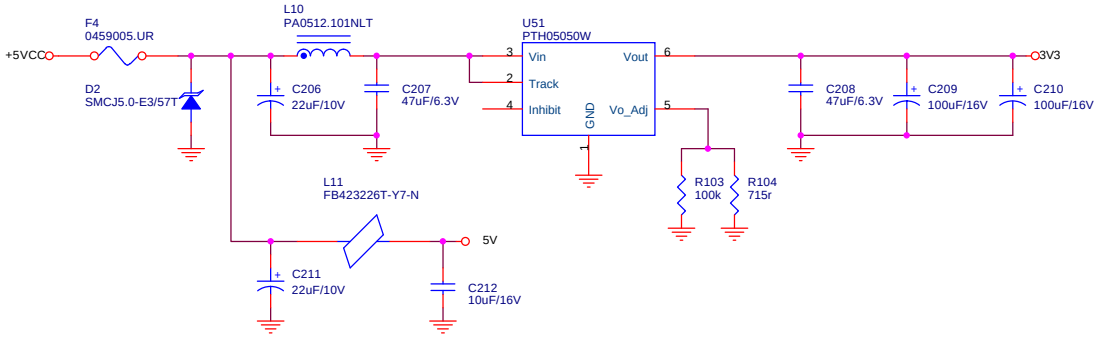

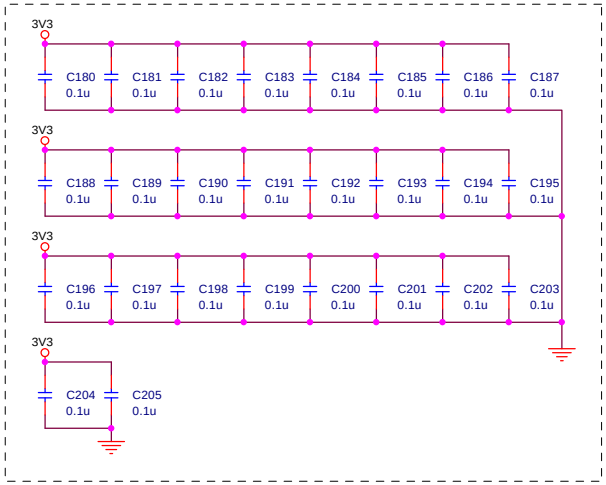

PAGE 12

SCHEMATIC DIAGRAM NOTES
1.UNLESS STATED OTHERWISE:
A.ALL RESISTOR ARE IN OHMS, 1% TOLERANCE.
B.ALL CAPACITORS ARE IN MICROFARADS,10% TOLERANCE.

Da-Shung Su

Institute of Physics Academia Sinica
Nankang
Taipei, 11529
Taiwan, R.O.C.

Title: Power Supply

Size	Document Number	Rev
A3	<Doc>	A

Date: Wednesday, August 18, 2010 Sheet 12 of 14

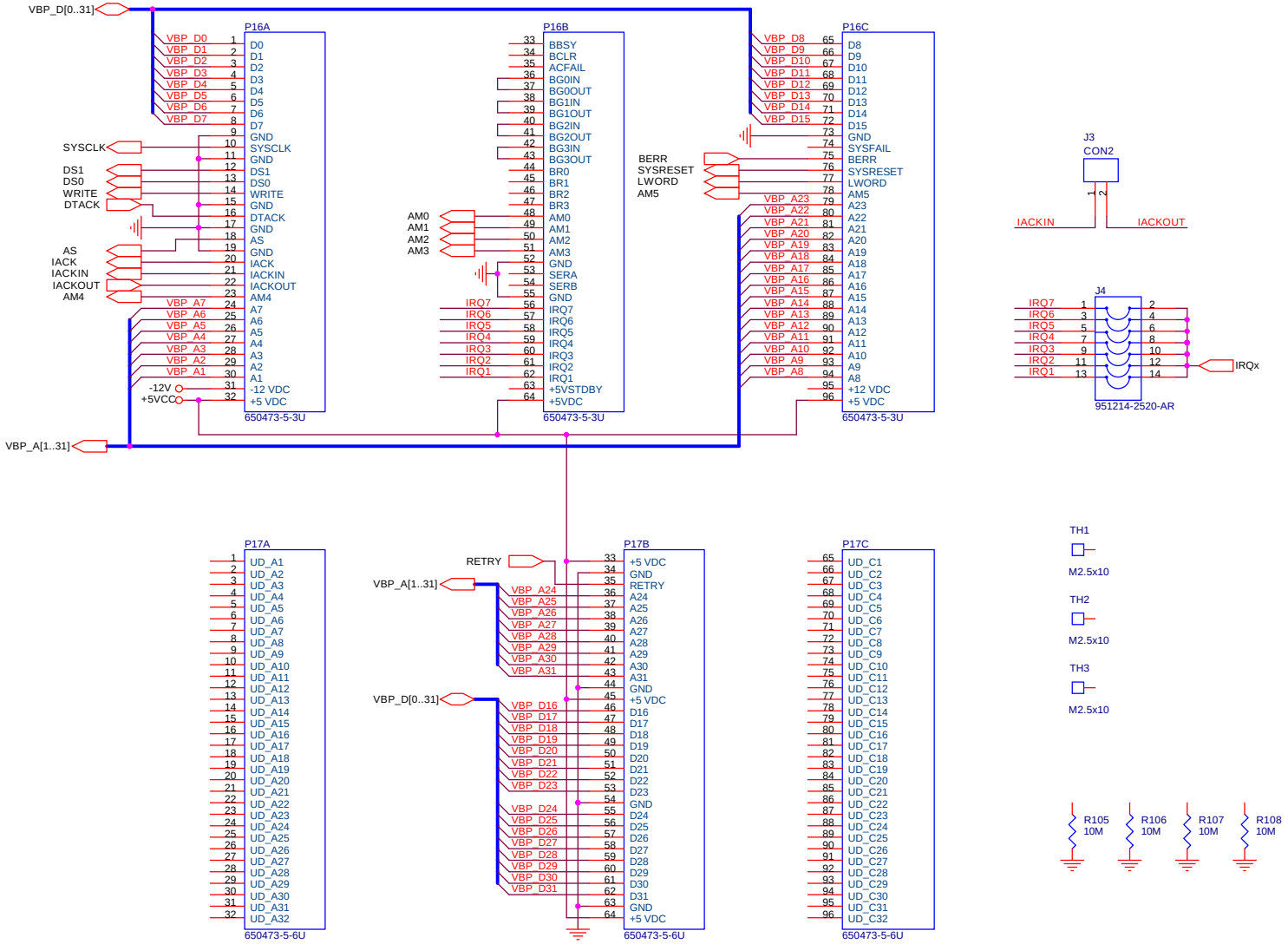

SCHEMATIC DIAGRAM NOTES
1.UNLESS STATED OTHERWISE:
A.ALL RESISTOR ARE IN OHMS, 1% TOLERANCE.
B.ALL CAPACITORS ARE IN MICROFARADS,10% TOLERANCE.

Da-Shung Su

Institute of Physics Academia Sinica
Nankang
Taipei, 11529
Taiwan, R.O.C.

Title
VME Bus Connector

Size	Document Number	Rev
A3	<Doc>	A

Date: Tuesday, August 17, 2010 Sheet 13 of 14

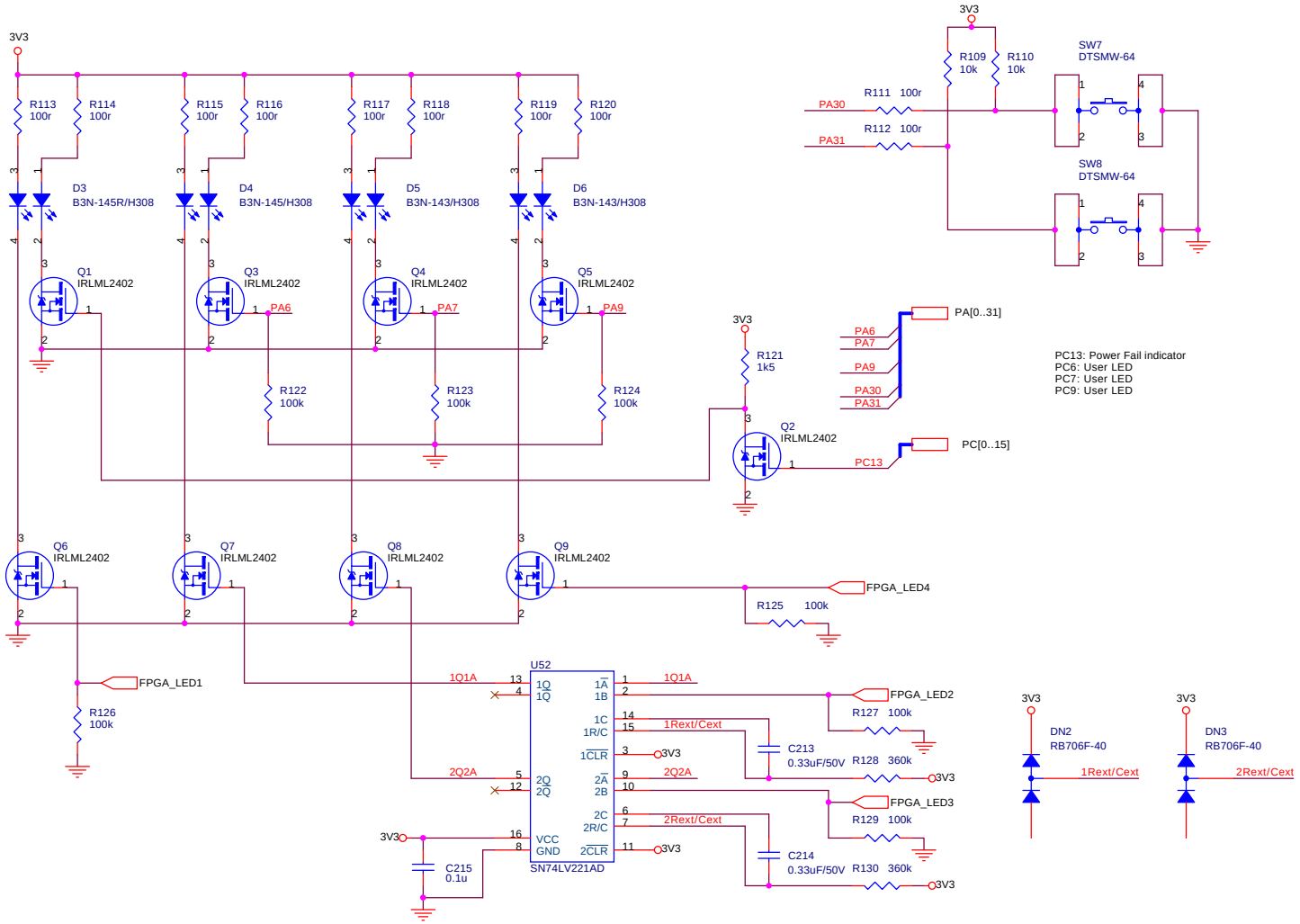

Output pulse duration Tw = Rt x Ct
Tw = pulse duration in ns
Rt = external timing resistance in kΩ
Ct = external capacitance in pF

SCHEMATIC DIAGRAM NOTES
1.UNLESS STATED OTHERWISE:
A.ALL RESISTOR ARE IN OHMS, 1% TOLERANCE.
B.ALL CAPACITORS ARE IN MICROFARADS,10% TOLERANCE.

Da-Shung Su

Institute of Physics Academia Sinica
Nankang
Taipei, 11529
Taiwan, R.O.C.

Title: User Interface

Size	Document Number	Rev
A3	<Doc>	A

Date: Tuesday, August 17, 2010 Sheet 14 of 14